VM 32 C

Project Guide • Propulsion

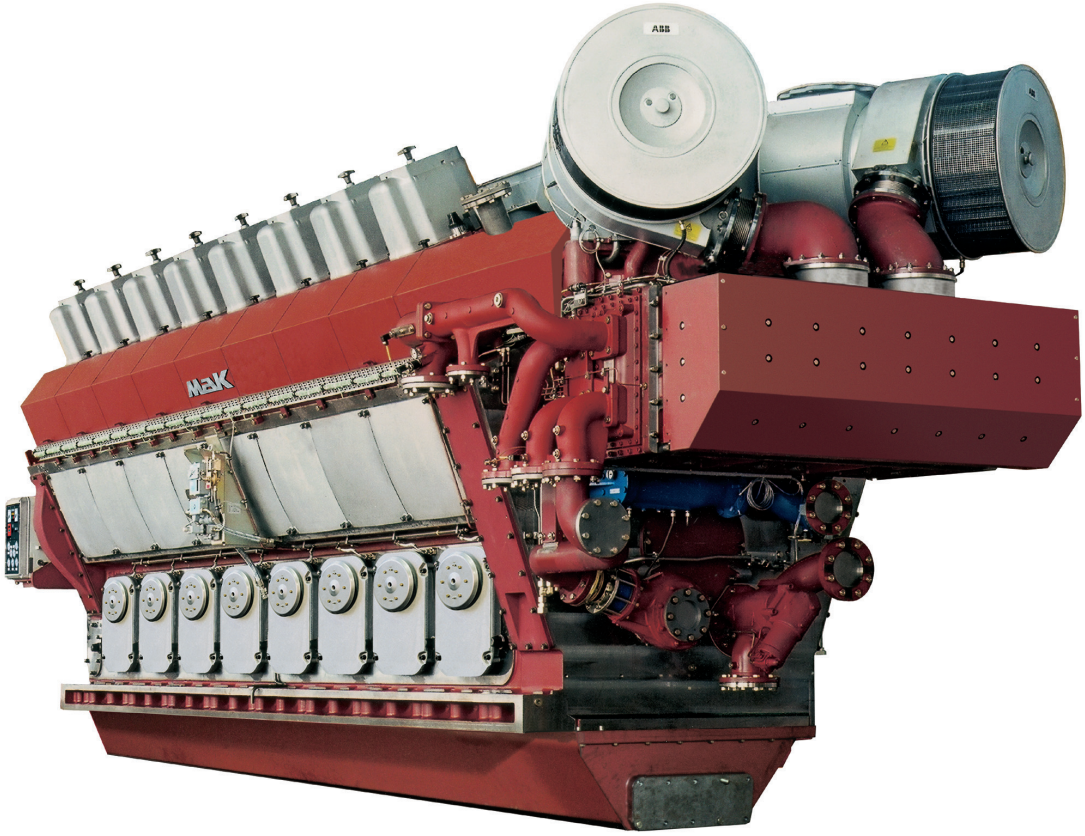

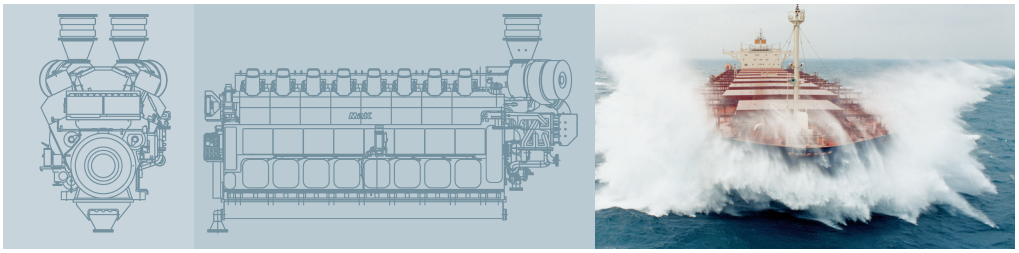

MaK

CATERPILLAR®

Introduction

Information for the user of this project guide

The project information contained in the following is not binding, since technical data of products may especially change due to product development and customer requests. Caterpillar Motoren reserves the right to modify and amend data at any time. Any liability for accuracy of information provided herein is excluded.

Binding determination of data is made by means of the Technical Specification and such other agreements as may be entered into in connection with the order. We will supply further binding data, drawings, diagrams, electrical drawings, etc. in connection with a corresponding order.

This edition supersedes the previous edition of this project guide.

All rights reserved. Reproduction or copying only with our prior written consent.

Caterpillar Motoren GmbH & Co. KG
P. O. Box, D-24157 Kiel
Germany
Phone +49 431 3995-01
Telefax +49 431 3995-2193

Issue February 2008

Marine Financing Guidelines

Power:	Cat and MaK.
Financial Products:	Construction, term and repower financing.
Repayment:	Loan terms up to 10 years, with longer amortizations available.
Financed Amount:	Up to 80 % of your vessel cost.
Rates:	Fixed or variable.
Currency:	US Dollars, Euros and other widely traded currencies.

Global Resource from One Source

When you select Cat Marine Power for your vessel, look to Cat Financial for world-class financial support. With marine lending offices in Europe, Asia and the US supporting Caterpillar's worldwide marine distribution network, Cat Financial is anchored in your homeport. We also have over 20 years of marine lending experience, so we understand your unique commercial marine business needs. Whether you're in the offshore support, cargo, ship assist, towing, fishing or passenger vessel industry, you can count on Cat Financial for the same high standard you expect from Caterpillar.

www.CAT.com/CatMarineFinance

Visit our web-site or see your local Cat dealer to learn how our marine financing plans and options can help your business succeed.

Ocean-Going Vessels

Pleasure Craft

Commercial Vessels

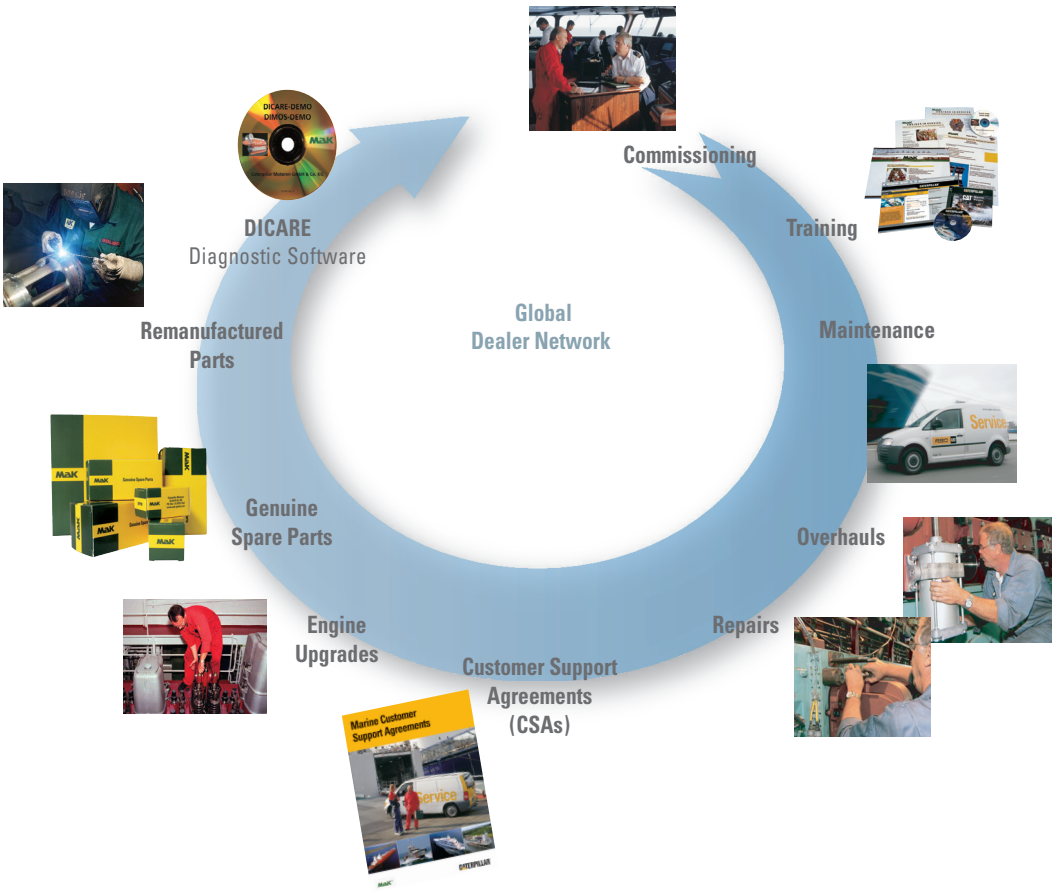

Providing integrated solutions for your power system means much more than just supplying your engines. Beyond complete auxiliary and propulsion power systems, we offer a broad portfolio of customer support solutions and financing options. Our global dealer network takes care of you wherever you are – worldwide. Localized dealers offer on-site technical expertise through marine specialists and an extensive inventory of all the spare parts you might need.

To find your nearest dealer, simply go to:
www.cat-marine.com **or** www.mak-global.com

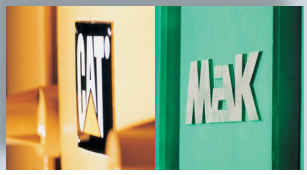

DET NORSKE VERITAS

MANAGEMENT SYSTEM CERTIFICATE

Certificate No.: 16193-2007-AQ-GER-TGA

This is to certify that

Caterpillar Motoren GmbH & Co. KG

Falckensteiner Str. 2
D - 24159 Kiel
with the sites

Caterpillar Motoren Rostock GmbH
Werftallee 13
D - 18119 Rostock

Gießerei Kiel GmbH
Falckensteiner Str. 2
D - 24159 Kiel

Caterpillar Motoren Guangdong Co. Ltd.
Shizhou Industrial Estate
Chencun Town
Shunde District, Foshan City
528341 P. R. China

has been found to conform to the Management System Standard

ISO 9001:2000

This certificate is valid for the following product or service ranges:

For Catarpillar Motoren Kiel:
Design, manufacture, sales and service of gas and diesel engines
For Catarpillar Motoren Rostock:
Manufacture of gas and diesel engines
For Caterpillar Motoren Guangdong:
Production of diesel engines
For Gießerei Kiel GmbH:
Manufacture and sale of casting in nodular and grey cast iron

Initial Certification date:
03.11.2003

This certificate is valid until:
30.11.2010

The audit has been performed under the supervision of
Jürgen Weißbauer
Lead Auditor

Deutscher Akkreditierungs Rat
DAR
TGA-ZM-04-92-00

Place and date:
Essen, 19.12.2007

for the Accredited Unit:
DNV ZERTIFIZIERUNG UND UMWELTGUTACHTER GMBH

Nikolaus Kim
Management Representative

The following sub-certificate belongs to this certificate: 16193CC!-2007-AQ-GER-TGA (Gießerei Kiel GmbH).

Lack of fulfilment of conditions as set out in the Certification Agreement may render this Certificate invalid.
DNV Zertifizierung und Umweltgutachter GmbH, Schnieringshof 14, 45329 Essen, Tel: +49 201 7296 300 Fax: +49 201 7296 333 - www.dnv.de/zertifizierung

Contents

		Page
1.	Engine description	1 - 2
2.	General data and outputs	3 - 4
3.	Restrictions for low load operation	5
4.	CP-propeller operation	6 - 7
5.	Technical data	8 - 9
6.	Engine dimensions	10 - 15
7.	Space requirement for dismantling of turbocharger cartridge and vibration damper, charge air cooler cleaning	16 - 17
8.	System connections	18
9.	Fuel oil system	19 - 31
10.	Lubricating oil system	32 - 36
11.	Cooling water system	37 - 42
12.	Flow velocities in pipes	43
13.	Starting air system	44 - 45
14.	Combustion air system	46
15.	Exhaust system	47 - 54
16.	Air borne sound power level	55
17.	Foundation	56 - 60
18.	Resilient mounting	61 - 62
19.	Power transmission	63 - 65
20.	Data for torsional vibration calculation	66
21.	Control and monitoring system	67 - 82
22.	Diagnostic system DICARE	83 - 84
23.	Diesel engine management system DIMOS	85
24.	Standard acceptance test run	86
25.	EIAPP certificate	87
26.	Painting/Preservation	88 - 89
27.	Lifting of engines	90
28.	Engine parts	91

1. Engine description

The M 32 C is a four stroke diesel engine, non-reversible, turbocharged with direct fuel injection.

V-engine M 32 C

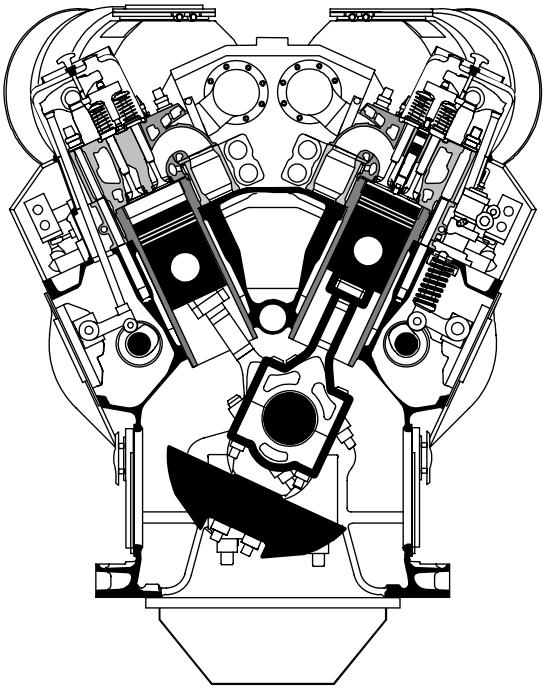

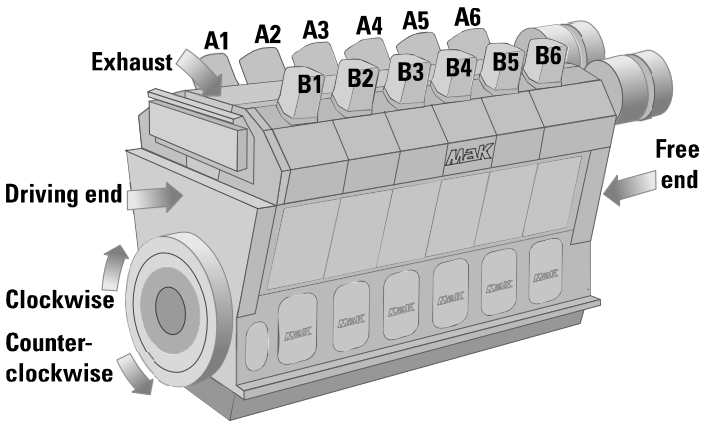

Cylinder configuration:	12, 16 V
Bore:	320 mm
Stroke:	420 mm
Stroke/Bore-Ratio:	1.3
Swept volume:	33.8 l/Cyl.
Output/cyl.:	480/500 kW
BMEP:	23.7/23.7 bar
Revolutions:	720/750 rpm
Mean piston speed:	10.1/10.5 m/s
Turbocharging:	single pipe system
Direction of rotation:	clockwise, option: counter-clockwise

1. Engine description

Engine design

- Designed for heavy fuel operation up to 700 cst./50 °C, fuel grade acc. to CIMAC H55 K55, ISO 8217, 1996 (E), ISO-F-RMH55 RMK55.

- 1-piece dry engine block made of nodular cast iron. It incorporates the crankshaft bearing, camshaft bearing, charge air receiver, vibration damper housing and gear drive housing.

- Underslung crankshaft with corrosion resistant main and big end bearing shells.

- Natural hardened liners, centrifugally casted, with calibration insert.

- Composite type pistons with steel crown and steel skirt.

- Piston ring set consisting of 2 chromium plated compression rings, first ring with chromium-ceramic plated running surfaces and 1 chromium plated oil scraper ring. All ring grooves are located in the steel crown. The first ring groove is chromium plated. The other ring grooves are hardened.

- 3-piece connecting rod with the possibility to dismount the piston without opening the big end bearing.

- Cylinder head made of nodular cast iron with 2 inlet and 2 exhaust valves with valve rotators. Direct cooled exhaust valve seats.

- Camshaft made of sections per cylinder allowing a removal of the pieces sideways.

- Turbocharger supplied with inboard plain bearings lubricated by engine lubricating oil.

- 2-stage fresh water cooling system with 2-stage charge air cooler.

- Nozzle cooling for heavy fuel operation only with engine lubricating oil.

2. General data and outputs

Engine	720 rpm kW	750 rpm kW
12 M 32 C	5760	6000
16 M 32 C	7680	8000

The maximum fuel rack position is mechanically limited to 100 % output for CPP applications. Limitation of 110 % for gensets and DE applications.

Output definition

The maximum continuous rating (locked output) stated by Caterpillar Motoren refers to the following reference conditions according to "IACS" (International Association of Classification Societies) for main and auxiliary engines:

Reference conditions according to IACS (tropical conditions):

air pressure	100 kPa (1 bar)
air temperature	318 K (45 °C)
relative humidity	60 %
seawater temperature	305 K (32 °C)

Fuel consumption

The fuel consumption data refer to the following reference conditions:

intake temperature	298 K (25 °C)
charge air temperature	318 K (45 °C)
charge air coolant inlet temperature	298 K (25 °C)
net heating value of the Diesel oil	42,700 kJ/kg
tolerance	5 %

Specification of the fuel consumption data without fitted-on pumps; for each pump fitted on an additional consumption of 1 % has to be calculated.

Lubricating oil consumption

Actual data can be taken from the technical data.

2. General data and outputs

Nitrogen oxide emissions (NO_x-values)

NO_x-limit values according to MARPOL 73/78 Annex VI:	12.1 g/kWh (n = 720 rpm) 12.0 g/kWh (n = 750 rpm)
Parent engine: CP propeller, according to cycle E2:	11.6 g/kWh (n = 720 rpm) 10.2 g/kWh (n = 750 rpm)

Emergency operation with one turbocharger

Max. output without time limit will be 40 % MCR at nominal speed or at combinator operation.

The exhaust pipes A und B have to be connected. Air outlet and gas inlet of the failed TC has to be closed. MDO operation only.

General installation aspect:

Inclication angles of ships at which engine running must be possible:

Heel to each side:	15°
Rolling to each side:	± 22.5°
Trim by head and stern:	5°
Pitching:	± 7.5°

3. Restrictions for low load operation

The engine can be started, stopped and run on heavy fuel oil under all operating conditions.

The HFO system of the engine remains in operation and keeps the HFO at injection viscosity. The temperature of the engine injection system is maintained by circulating hot HFO and heat losses are compensated.

The lube oil treatment system (lube oil separator) remains in operation, the lube oil is separated continuously.

The operating temperature of the engine cooling water is maintained by the cooling water preheater.

Below 25 % output heavy fuel operation is neither efficient nor economical.

A change-over to diesel oil is recommended to avoid disadvantages as e.g. increased wear and tear, contamination of the air and exhaust gas systems and increased contamination of lube oil.

Cleaning run of engine

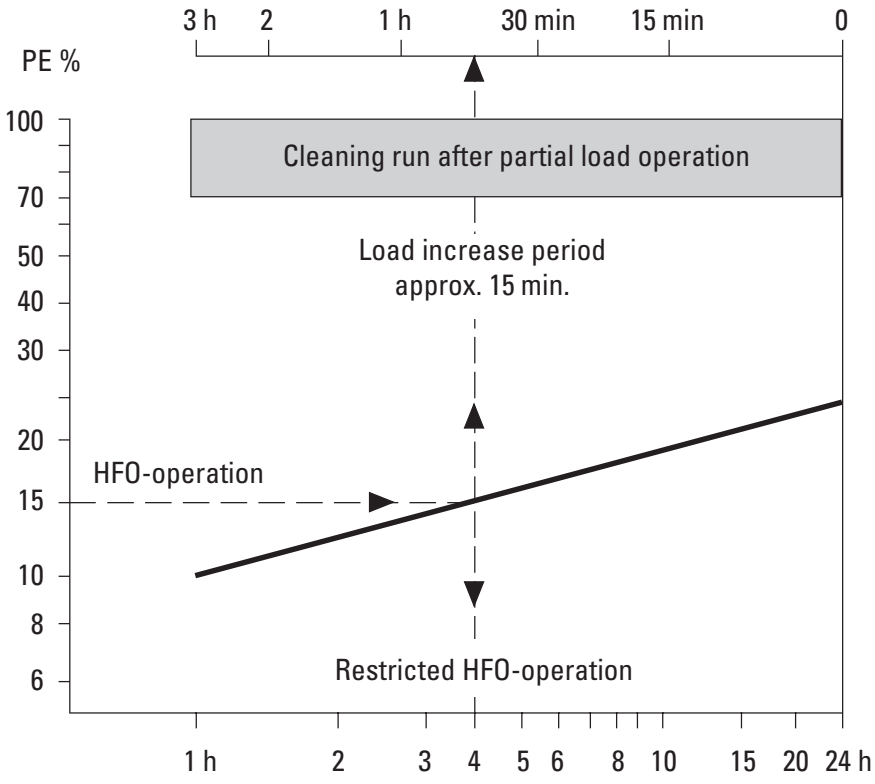

4. CP propeller operation

The design area for the combinator has to be on the right-hand side of the theoretical propeller curve and may coincide with the theoretical propeller curve in the upper speed range.

A load above the output limit curve is to be avoided by the use of the load control device or overload protection device.

Binding data (depending on the type of vessel, rated output, speed and the turbocharging system) will be established upon order processing.

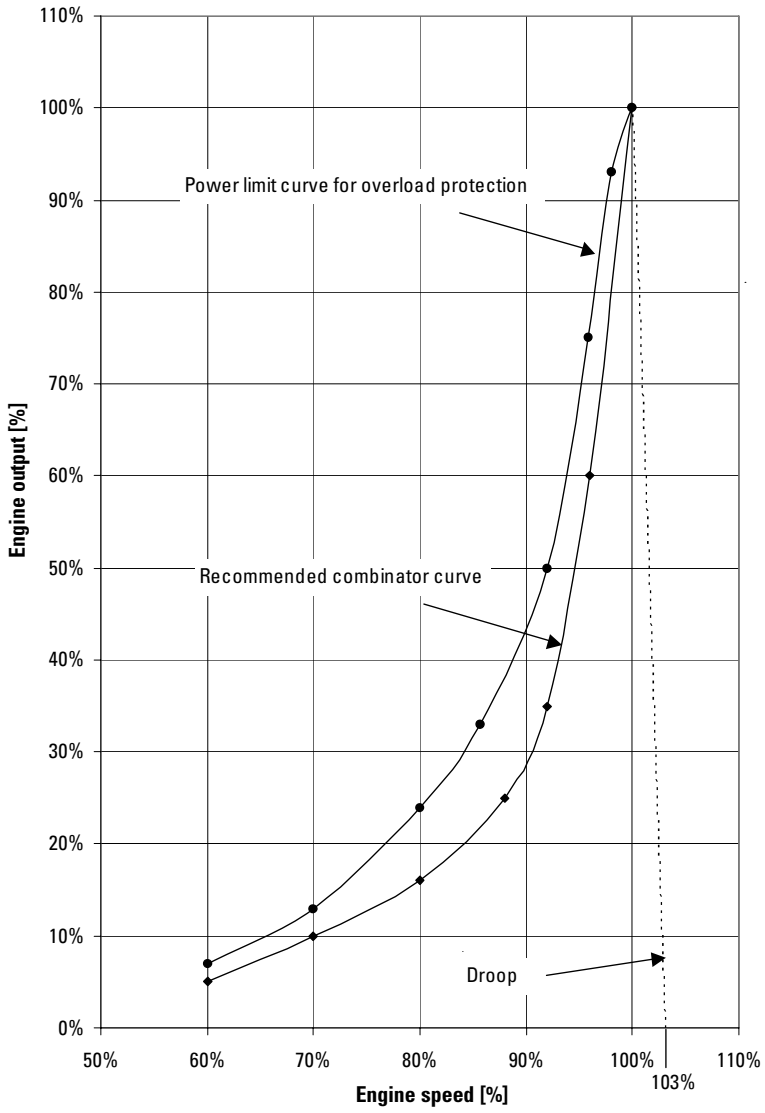

Emergency (A) and normal (B, C) loading conditions [sec] at operating temperature:

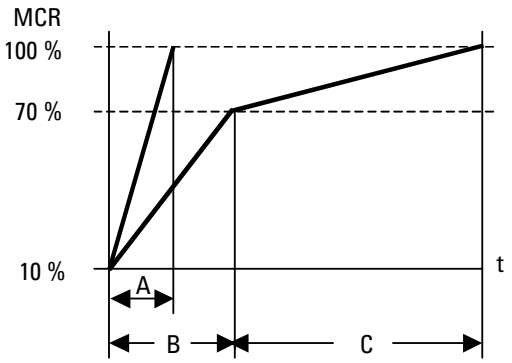

Engine	A [s]	B [s]	C [s]
12 M 32 C	25 - 30	40 - 50	180
16 M 32 C	40 - 45	50 - 60	180

4. CP propeller operation

with marine gas oil or marine diesel oil only

The design area for the combinator has to be on the right-hand side of the theoretical propeller curve and may coincide with the theoretical propeller curve in the upper speed range.

A load above the output limit curve is to be avoided by the use of the load control device or overload protection device.

Binding data (depending on the type of vessel, rated output, speed and the turbocharging system) will be established upon order processing

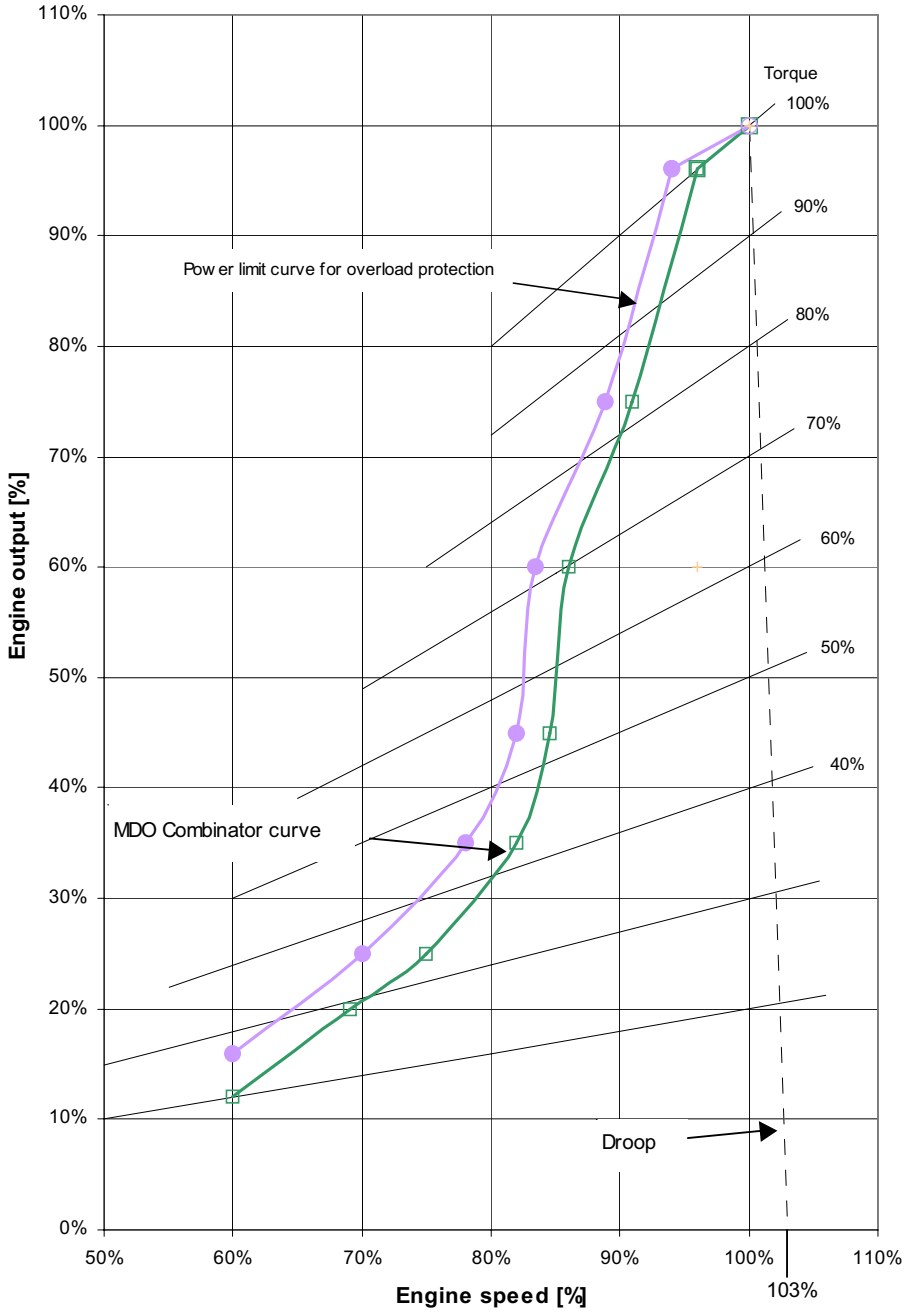

MAK

5. Technical data

	Cylinder	12	12	16	16
Performance data					
Maximum continous rating acc. ISO 3046/1	kW	5760	6000	7680	8000
Speed	rpm	720	750	720	750
Minimum speed	rpm	240	250	240	250
Brake mean effektive pressure	bar	23.7	23.7	23.7	23.7
Charge air pressure	bar	3	3	3	3
Compression pressure	bar	150	150	150	150
Firing pressure	bar	198	198	198	198
Combustion air demand (ta = 20 °C)	m^3/h	36000	37500	46700	48650
Delivery/injection timing	° v. OT	11.5/9.5	11.5/9.5	11.5/9.5	11.5/9.5
Exhaust gas temperature after cylinder/turbine	°C	370/325	380/310	430/330	430/330
Specific fuel oil consumption					
Propeller/n = const [1] 100 %	g/kWh	178	179	178	179
85 %	g/kWh	178	179	178	179
75 %	g/kWh	182	183	182	183
50 %	g/kWh	194	195	194	195
Lubricating oil consumption [2]	g/kWh	0.6	0.6	0.6	0.6
Turbocharger type		2*TPS61	2*TPS61	2*TPL65	2*TPL65
Fuel					
Engine driven booster pump	$m^3/h/bar$	-	-	-	-
Stand-by booster pump	$m^3/h/bar$	3.9/5	4.2/5	5.2/5	5.4/5
Mesh size MDO fine filter	mm	0.025	0.025	0.025	0.025
Mesh size HFO automatic filter	mm	0.010	0.010	0.010	0.010
Mesh size HFO fine filter	mm	0.034	0.034	0.034	0.034
Nozzle cooling by lubricating oil system					
Lubricating Oil					
Engine driven pump	$m^3/h/bar$	161.3/10	168/10	161.3/10	168/10
Independent pump	$m^3/h/bar$	120/10	120/10	140/10	140/10
Working pressure on engine inlet	bar	4 - 5	4 - 5	4 - 5	4 - 5
Engine driven suction pump	$m^3/h/bar$	-	-	-	-
Independent suction pump	$m^3/h/bar$	-	-	-	-
Priming pump	$m^3/h/bar$	12/5	12/5	16/5	16/5
Sump tank content	m^3	7.6	8.0	10.0	10.8
Temperature at engine inlet	°C	60-65	60-65	60-65	60-65
Temperature controller NB	mm	125	125	150	150
Double filter NB	mm	125	125	125	125
Mesh size double filter	mm	0.08	0.08	0.08	0.08
Mesh size automatic filter	mm	0.03	0.03	0.03	0.03

5. Technical data

	Cylinder	12	12	16	16
Fresh water cooling					
Engine content	m^3	1.4	1.4	1.9	1.9
Pressure at engine inlet min/max	bar	2 - 2.5	2 - 2.5	2 - 2.5	2 - 2.5
Header tank capacity	m^3	0.7	0.7	1	1
Temperature at engine outlet	°C	80 - 90	80 - 90	80 - 90	80-90
Two circuit system					
Engine driven pump HT	m^3/h/bar	100/3.0	100/3.0	100/3.0	100/3.0
Independent pump HT	m^3/h/bar	100/3.0	110/3.0	120/3.0	120/3.0
HT-Controller NB	mm	125	125	150	150
Water demand LT-charge air cooler	m^3/h	90	90	90	90
Temperature at LT-charge air cooler inlet	°C	38	38	38	38
Heat Dissipation					
Specific jacket water heat	kJ/kW	500	500	500	500
Specific lub. oil heat	kJ/kW	525	525	525	525
Lub. oil cooler	kW	840	875	1114	1167
Jacket water	kW	800	833	1067	1111
Charge air cooler (HT-Stage) [3]	kW	1543	1705	2080	2228
Charge air cooler (LT-Stage) [3]	kW	518	562	790	847
(HT-Stage after engine)					
Heat radiation engine	kW	250	260	333	347
Exhaust gas					
Silencer/spark arrester NB 25 dBA	mm	900	900	1000	1000
NB 35 dBA	mm	900	900	1000	1000
Pipe diameter NB after turbine	mm	2*600	2*600	2*700	2*700
Maximum exhaust gas pressure drop	bar	0.03	0.03	0.03	0.03
Starting air					
Starting air pressure max.	bar	30	30	30	30
Minimum starting air pressure	bar	10	10	10	10
Air consumption per Start [4]	Nm^3	1.2	1.2	1.2	1.2

[1] Reference conditions: LCV = 42700 kJ/kg, ambient temperature 25 °C charge air temperature 45 °C, tolerance 5 %, + 1 % for each engine driven pump
[2] Standard value, tolerance $\pm$ 0.3 g/kWh, related on full load
[3] Charge air heat based on 45 °C ambient temperature
[4] Preheated engine

6. Engine dimensions

Turbocharger at free end

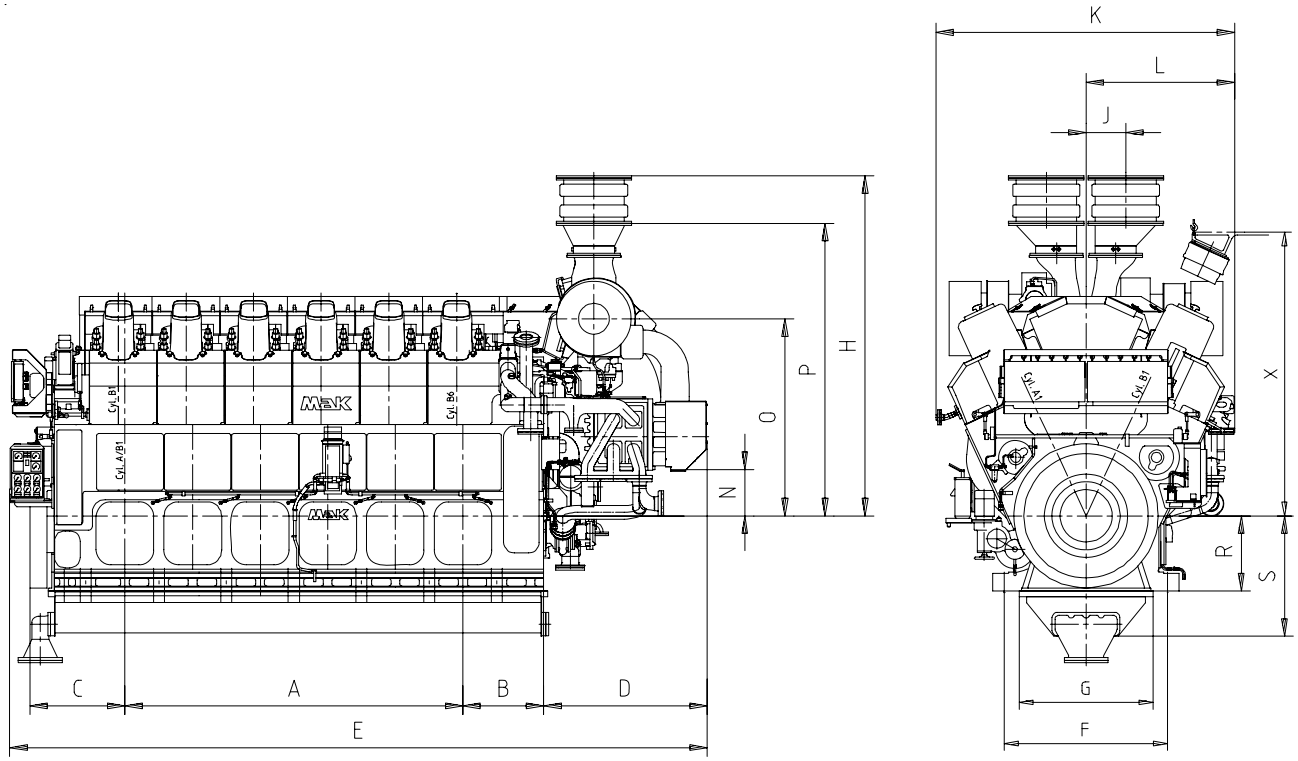

Engine Type	Dimensions [mm]																	Dry weight with flywheel
	A	B	C	D	E	F	G	H	J	K	L	M	N	0	P	R	S	[t]
12 M 32 C	3375	807	949	1630	6963	1630	1338	3395	396.5	2985	1485	1307	464	1968	2920	750	1205	64.4
16 M 32 C	4725	807	949	1630	8313	1630	1338	3350	553	2923	1488	1211	464	1899	2806	750	1205	81.6

Removal of:

Piston and cylinder liner in transverse direction X = 2834mm

Engine centre distance 3500 mm
(2 engines side by side)

6. Engine dimensions

Turbocharger at driving end

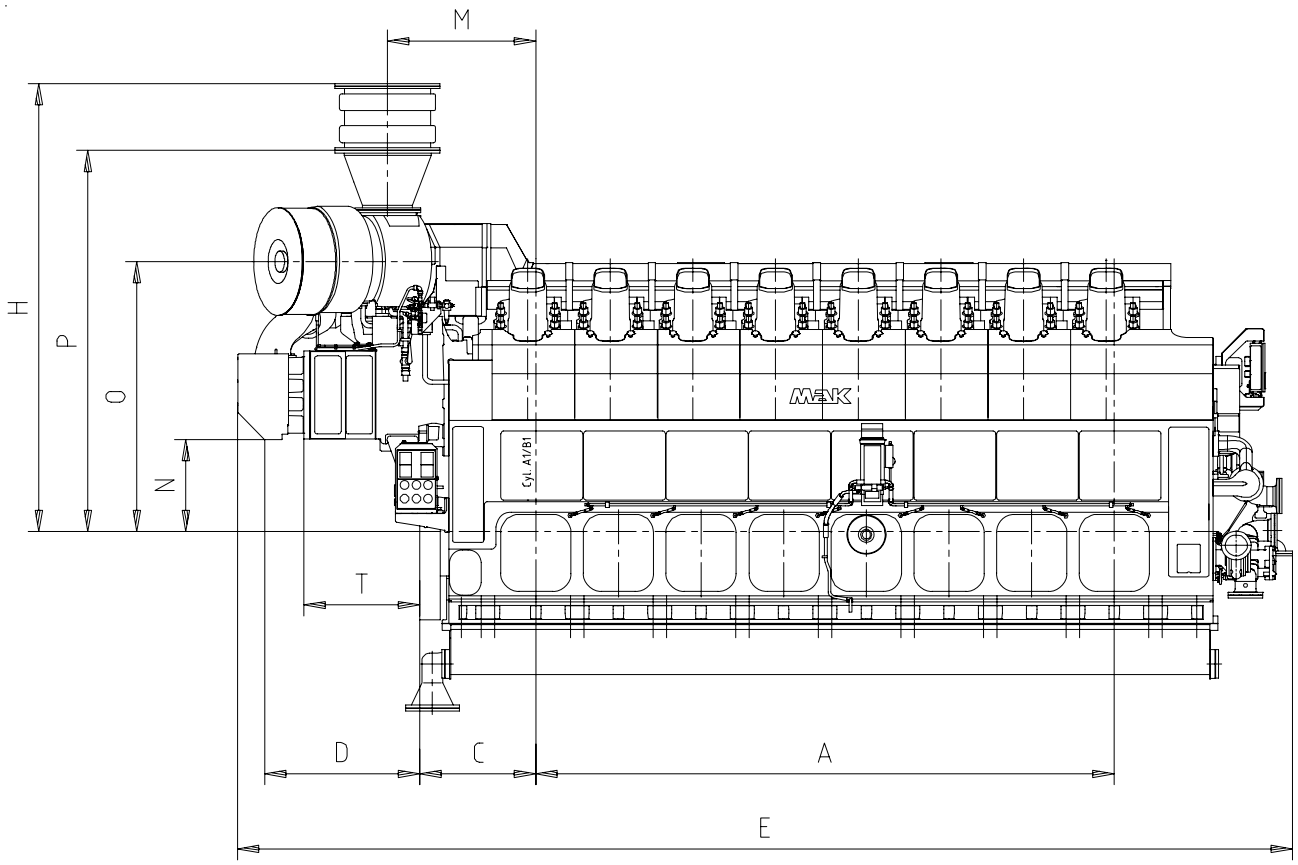

Engine Type	Dimensions [mm]									Dry weight with flywheel
	A	C	D	E	M	N	O	P	T	[t]
12 M 32 C	ask for availability									
16 M 32 C	4725	949	1264	8616	1211	753	2205	3113	945	81.6

Removal of:

Piston and liner in transverse direction X = 2836mm

Engine centre distance 3500 mm
(2 engines side by side)

6. Engine dimensions

12 M 32 C, Turbocharger at driving end

ask for availability

6. Engine dimensions

12 M 32 C, Turbocharger at free end

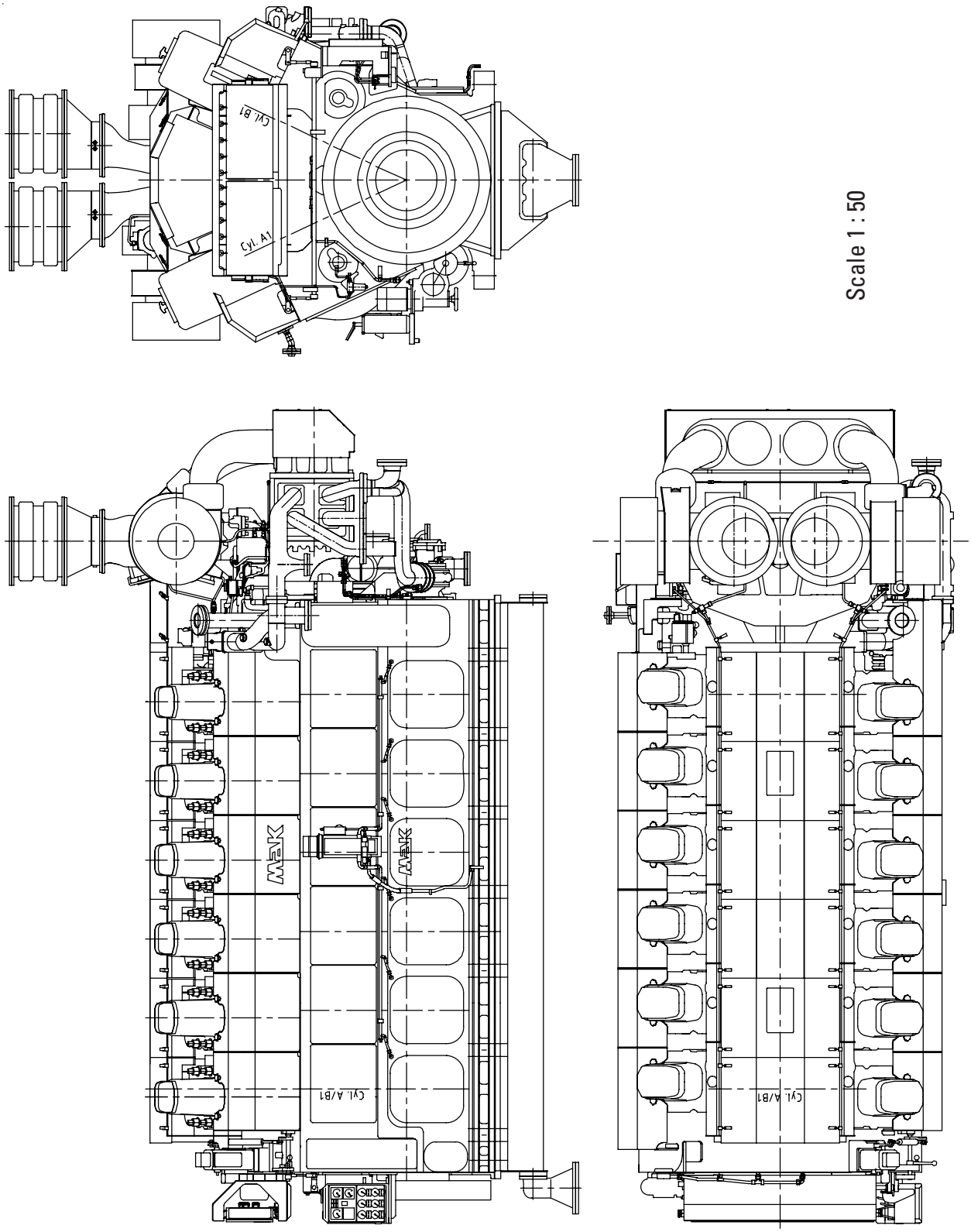

6. Engine dimensions

16 M 32 C, Turbocharger at driving end

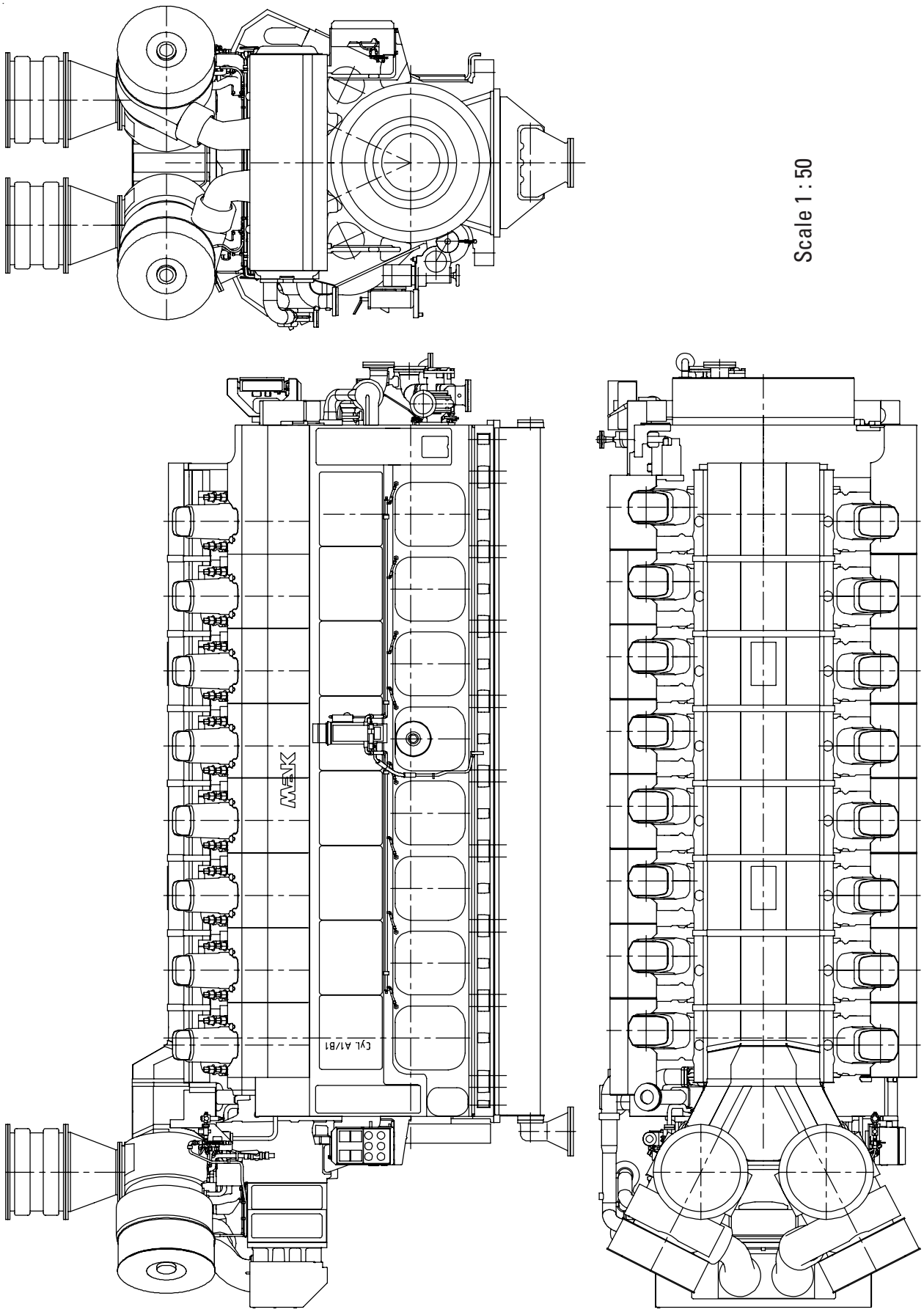

6. Engine dimensions

16 M 32 C, Turbocharger at free end

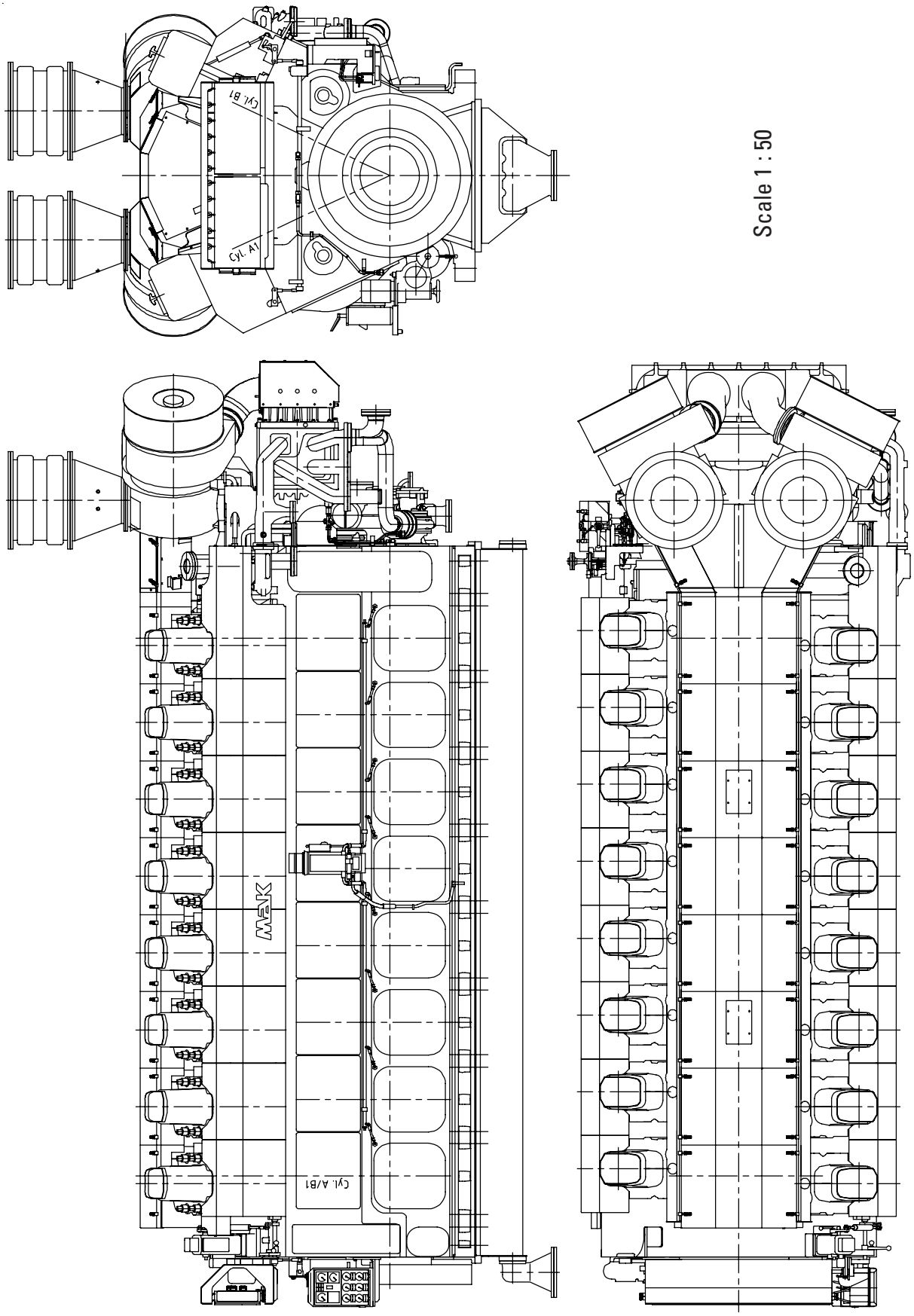

7. Space requirement for dismantling of turbocharger cartridge and vibration damper, charge air cooler cleaning

12 M 32 C

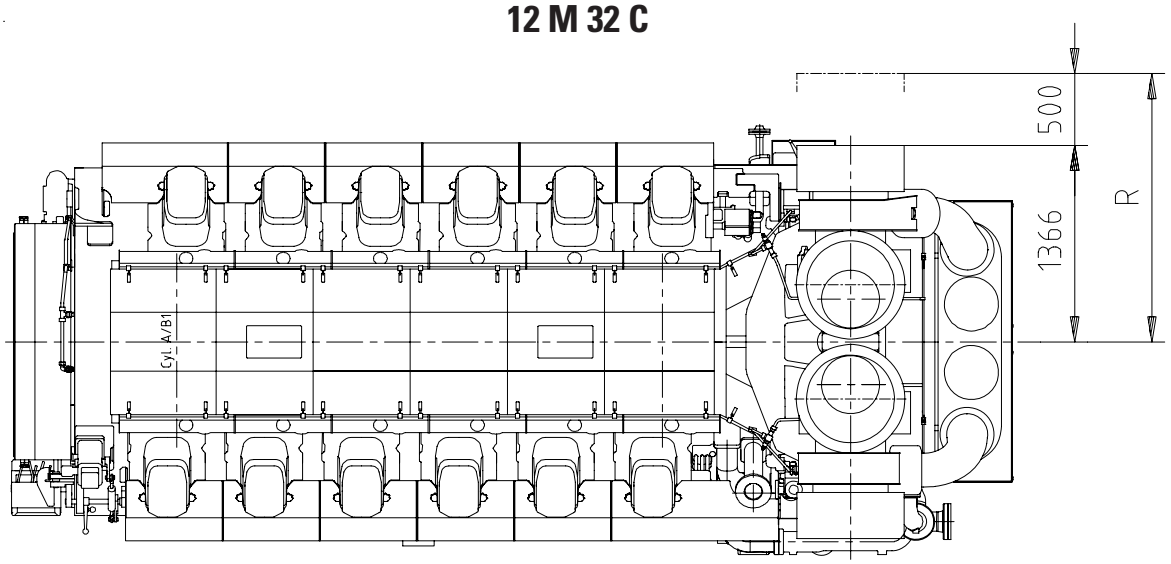

Turbocharger dismantling

	R [mm]	Weight [kg]
12 M 32 C	1866	160

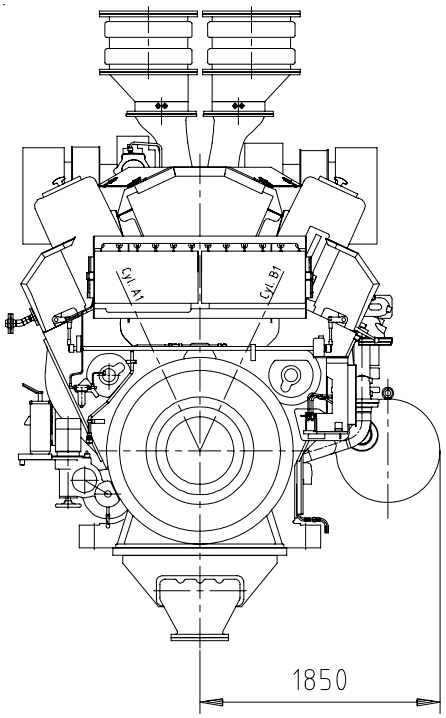

Charge air cooler cleaning

Dimension of cooler
Length: 2010 mm
Width: 536 mm
Height: 716 mm
Weight: 1100 kg

Cleaning is carried out with charge air cooler dismantled. A container to receive the cooler and cleaning liquid is to be supplied by the yard. Intensive cleaning is achieved by using ultra sonic vibrators.

Vibration damper dismantling

The vibration damper is arranged at the free end of the engine.

Engine	Diam. [mm]	Width [mm]	Weight [kg]
12 M 32 C	800	90	273

7. Space requirement for dismantling of turbocharger cartridge and vibration damper, charge air cooler cleaning

16 M 32 C

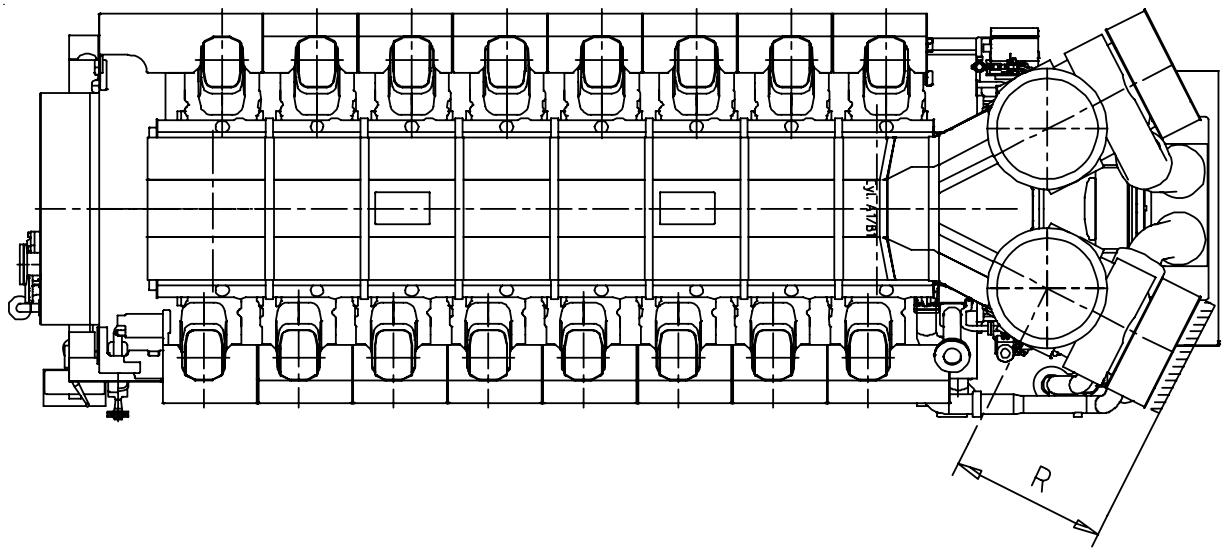

Turbocharger dismantling

	R [mm]	Weight [kg]
16 M 32 C	1115	211

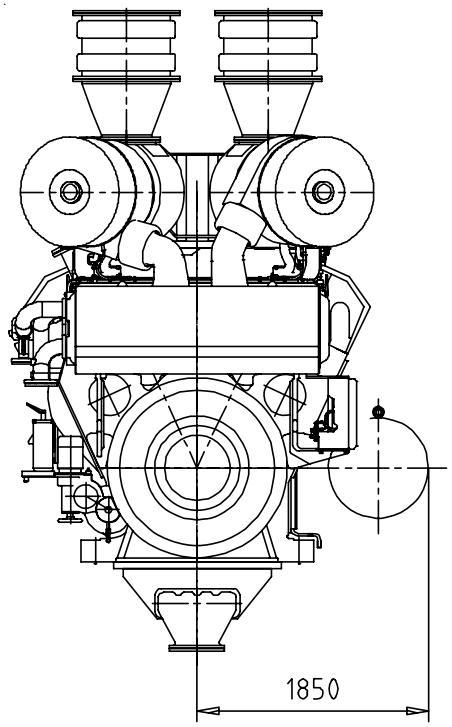

Charge air cooler cleaning

Dimension of cooler
Length: 2010 mm
Width: 536 mm
Height: 716 mm
Weight: 1100 kg

Cleaning is carried out with charge air cooler dismantled. A container to receive the cooler and cleaning liquid is to be supplied by the yard. Intensive cleaning is achieved by using ultra sonic vibrators.

Vibration damper dismantling

The vibration damper is arranged at the free end of the engine.

Engine	Diam. [mm]	Width [mm]	Weight [kg]
16 M 32 C	800	114	335

8. System connections

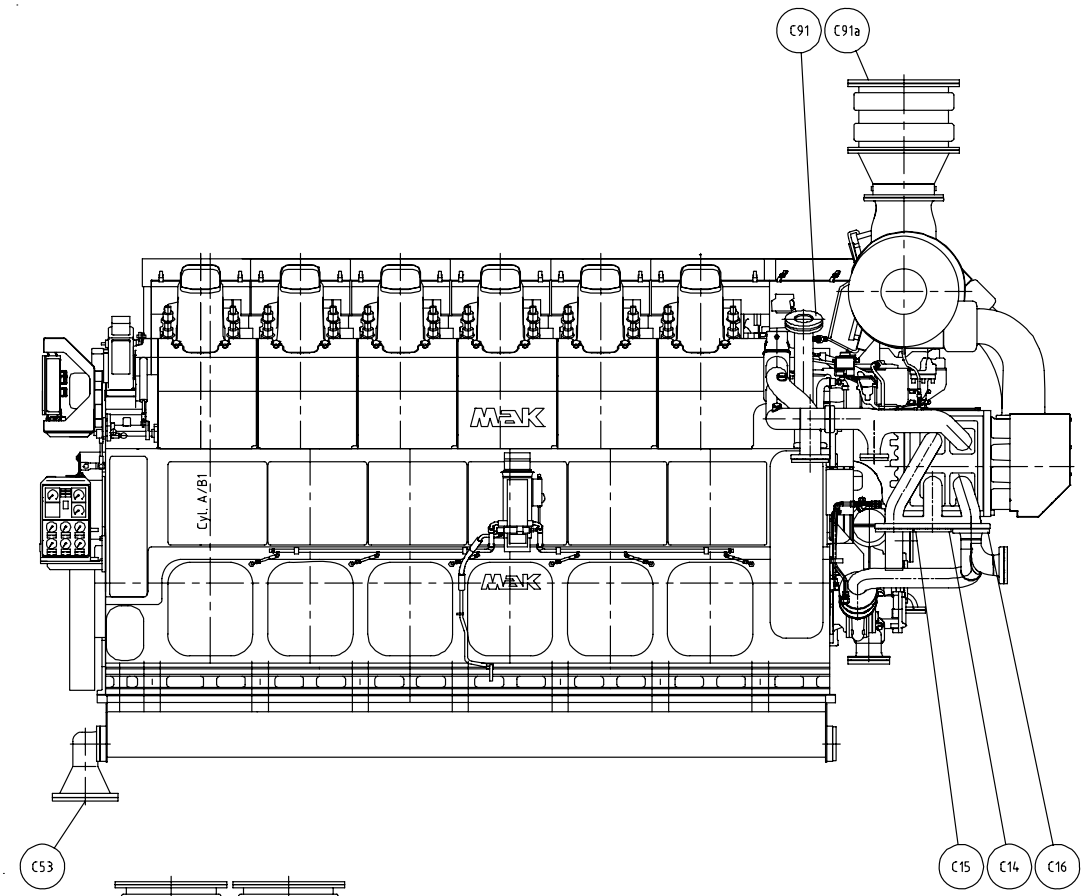

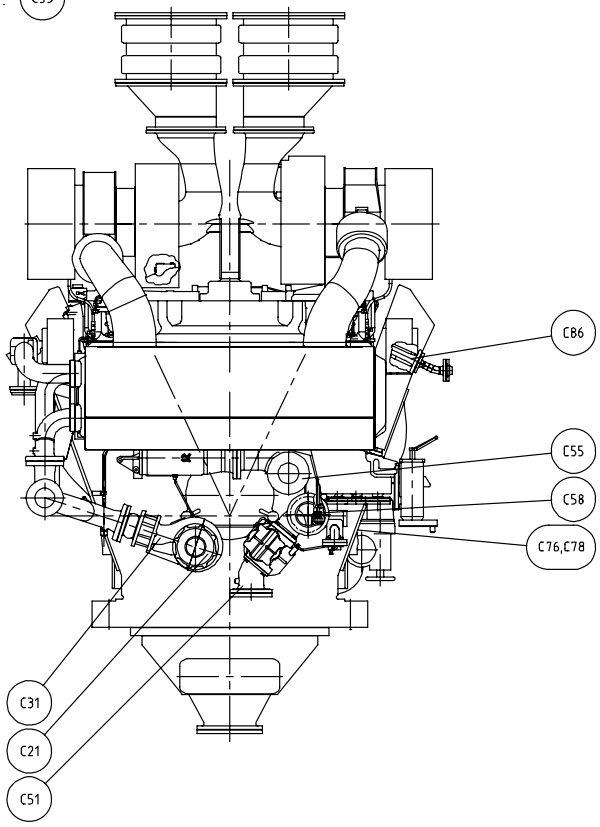

C 14	Charge Air Cooler LT, Inlet	DN 125
C 15	Charge Air Cooler LT, Outlet	DN 125
C 16	Charge Air Cooler HT, Outlet	DN 125
C 21	Freshwater Pump HT, Inlet	DN 80
C 31	Freshwater Pump HT, Outlet	DN 80
C 51	Luboil Force Pump, Inlet	DN 150
C 53	Luboil Discharge	DN 400
C 55	Luboil Inlet Protective Filter	DN 150
C 58	Luboil Force Pump, Outlet	DN 150
C 76	Fuel Inlet, Duplexfilter	DN 50
C 78	Fuel Outlet	DN 50
C 86	Starting Air	DN 40
C 91	Crankcase Ventilation	DN 125
C 91a	Exhaust Gas Outlet 12/16 M 32 C	DN 600/700

MaK

9. Fuel oil system

Marine gas oil / marine diesel oil operation

Two fuel product groups are permitted for MaK engines:

Pure distillates: Gas oil, marine gas oils, diesel fuel

Distillate/mixed fuels: Marine gas oil (MGO), marine diesel oil (MDO). The difference between distillate/mixed fuels and pure distillates are higher density, sulphur content and viscosity.

	MGO		MDO	
	Designation	**Max. viscosity** [cSt/40 °C]	**Designation**	**Max. viscosity** [cSt/40 °C]
ISO 8217: 1996	ISO-F-DMA	1.5 - 6.0	ISO-F-DMB ISO-F-DMC	11 14
ASTM D 975-78	No. 1 D No. 2 D	2.4 4.1	No. 2 D No. 4 D	4.1 24.0
DIN	DIN EN 590	8		

Max. injection viscosity 12 cSt (2 °E)

Strainer (separate) DF 2: Mesh size 0.32 mm, dimensions see HFO-system

Intermediate tank (separate) DT 2: Capacity 100 l

Preheater (separate) DH 1: Heating capacity

$$Q\ [kW] = \frac{P_{eng.}\ [kW]}{166}$$

Not required with:
- MGO ≤ 7 cSt/40 °C
- Heated day tank

9. Fuel oil system

Marine gas oil / marine diesel oil operation

Feed pump (separate) DP 1/DP 2:

Capacity see technical data
Screw type pump with mechanical seal.
Installation vertical or horizontal.
Delivery head 5 bar.

Pressure regulating valve (separate) DR 2:

Dimensions see HFO-system/Pressure regulating valve.

Fine filter (fitted) DF 1:

Duplex filter, mesh size see technical data.

Separator DS 1:

Recommended for MGO
Required for MDO

The utilisation must be in accordance with the makers official recommendation (details from the head office).

$V\ [l/h] = 0.22 \cdot P_{eng.}\ [kW]$

9. Fuel oil system

MGO / MDO operation

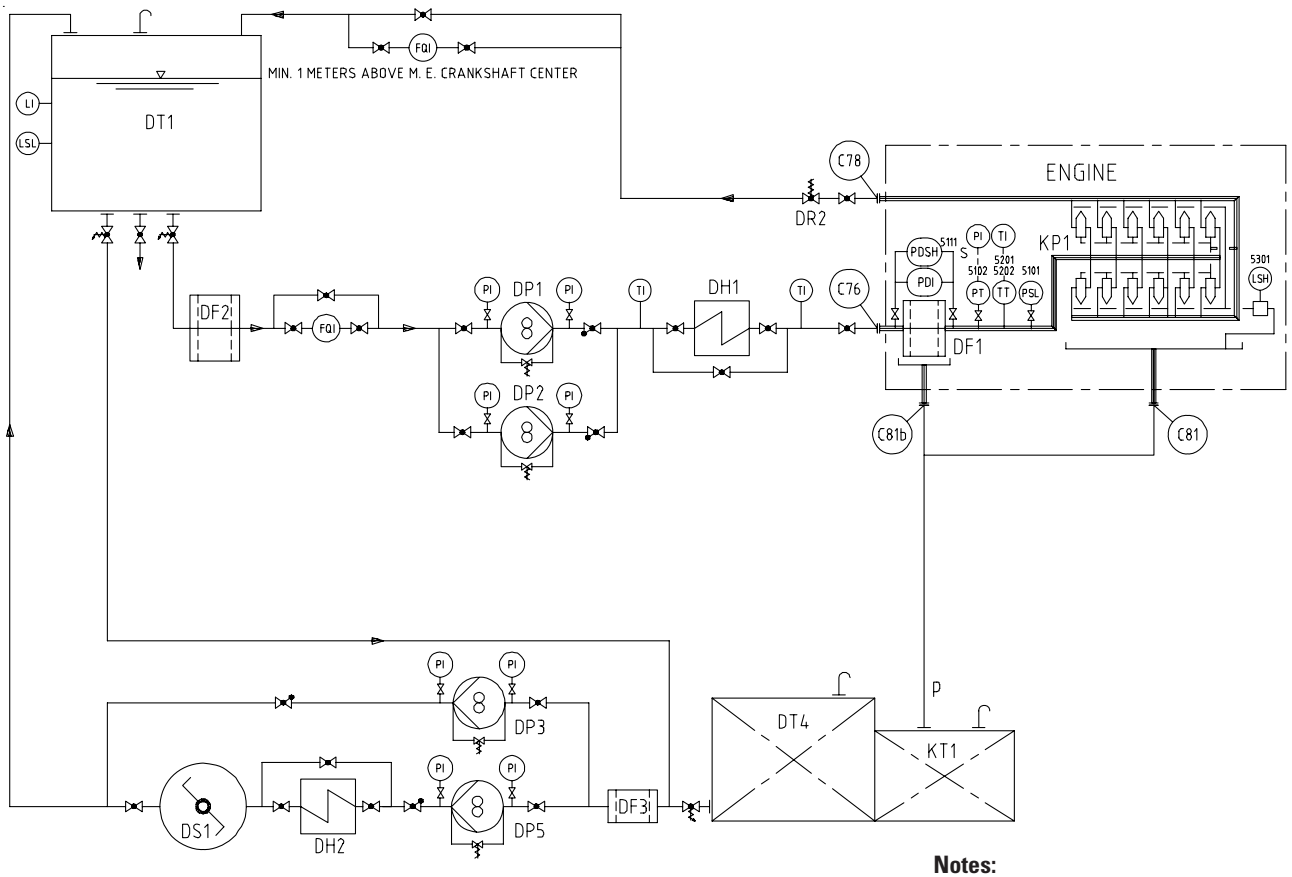

Notes:

p Free outlet required

s Please refer to the measuring point list regarding design of the monitoring devices

General notes:

For location, dimensions and design (e. g. flexible connection) of the disconnecting points see engine installation drawing.

DH1 not required with:
- MGO ≤ 7 cSt/40°
- heated diesel oil day tank DT1

Accessories and fittings:

DF1	Fuel fine filter (duplex filter)	KP1	Fuel injection pump
DF2	Fuel primary filter (duplex filter)	KT1	Drip fuel tank
DF3	Fuel coarse filter	FQI	Flow quantity indicator
DH1	Diesel oil preheater	LI	Level indicator
DH2	Electrical preheater for diesel oil (separator)	LSH	Level switch high
DP1	Diesel oil feed pump	LSL	Level switch low
DP2	Diesel oil stand-by feed pump	PDI	Diff. pressure indicator
DP3	Diesel oil transfer pump (to day tank)	PDSH	Diff. pressure switch high
DP5	Diesel oil transfer pump (separator)	PI	Pressure indicator
DR2	Fuel pressure regulating valve	PSL	Pressure switch low
DS1	Diesel oil separator	PT	Pressure transmitter
DT1	Diesel oil day tank, min. 1 m above crankshaft level	TI	Temperature indicator
DT4	Diesel oil storage tank	TT	Temperature transmitter (PT 100)

Connecting points:

C76	Inlet duplex filter	C81	Drip fuel
C78	Fuel outlet	C81b	Drip fuel (filter pan)

MAK

9. Fuel oil system

Heavy fuel operation

Requirements for residual fuels for diesel engines (as bunkered)

Designation:			CIMAC A 10	CIMAC B 10	CIMAC C 10	CIMAC D 15	CIMAC E 25	CIMAC F 25	CIMAC G 35	CIMAC H 35	CIMAC K 35	CIMAC H 45	CIMAC K 45	CIMAC H 55	CIMAC K 55
	Related to ISO8217 (2005):F-		RMA30	RMB30	RMB30	RMD80	RME180	RMF180	RMG380	RMH380	RMK380	RMH500	RMK500	RMH700	RMK700
Characteristic	Dim.	Limit													
Density at 15 °C	kg/m³	max	950 [2]	975 [3]		980 [4]	991		991		1010	991	1010	991	1010
Kin. viscosity at 100 °C	cSt [1]	max		10		15	25		35			45		55	
		min	6 [5]				15 [5]								
Flash point	°C	min		60		60	60		60			60		60	
Pour point (winter)	°C	max		0		30	30		30			30		30	
(summer)				6	24										
Carbon Residue (Conradson)	% (m/m)	max	12 [6]		14	14	15	20	18	22		22		22	
Ash	% (m/m)	max		0.10		0.10	0.10	0.15	0.15	0.15 [7]		0.15 [7]		0.15 [7]	
Total sedim. after ageing	% (m/m)	max		0.10		0.10	0.10		0.10			0.10		0.10	
Water	% (V/V	max		0.5		0.5	0.5		0.5			0.5		0.5	
Sulphur	% (m/m)	max		3.5		4.0	4.5		4.5			4.5		4.5	
Vanadium	mg/kg	max	150		300	350	200	500	300	600		600		600	
Aluminium + Silicon	mg/kg	max		80		80	80		80			80		80	
Zinc	mg/kg	max		15		15	15		15			15		15	
Phosphor	mg/kg	max		15		15	15		15			15		15	
Calcium	mg/kg	max		30		30	30		30			30		30	

[1] An indication of the approximate equivalents in kinematic viscosity at 50 °C and Redw. I sec. 100 °F is given below:

Kinematic viscosity at 100 °C mm²/s (cSt)	7	10	15	25	35	55
Kinematic viscosity at 50 °C mm²/s (cSt)	30	40	80	180	380	700
Kinematic viscosity at 100 °F Redw. I sec.	200	300	600	1500	3000	7000

Fuel shall be free of used lubricating oil (ulo)

[2] ISO: 975
[3] ISO: 981
[4] ISO: 985
[5] ISO: not limited
[6] ISO: Carbon Residue 10
[7] ISO: 0.20

9. Fuel oil system

Heavy fuel operation

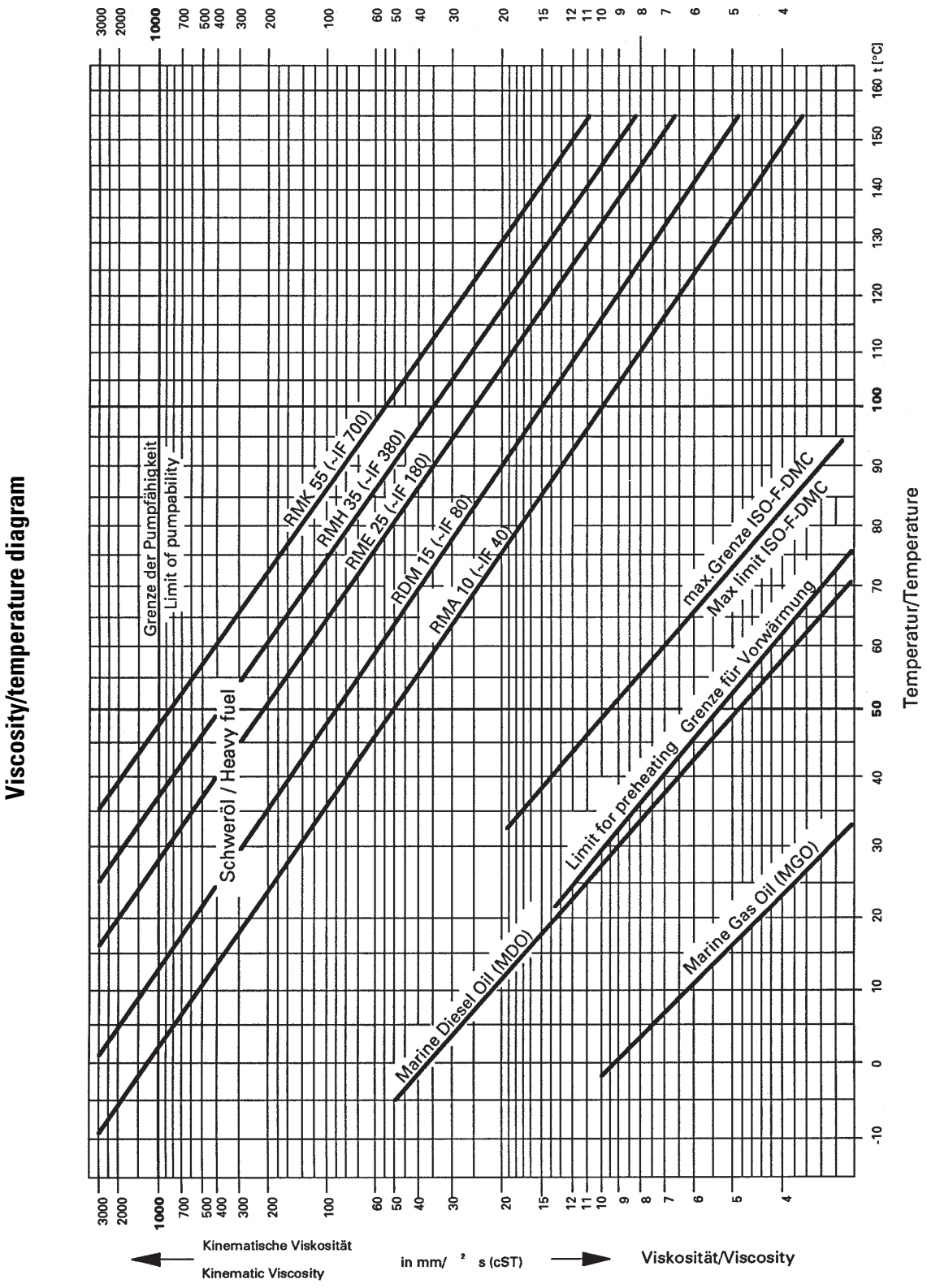

9. Fuel oil system
Heavy fuel operation

Minimum requirements for storage, treatment and supply systems

Bunker tanks:

In order to avoid severe operational problems due to incompatibility, each bunkering must be made in a separate storage tank.

Settling tanks:

In order to ensure a sufficient settling effect, the following settling tank designs are permissible:

- 2 settling tanks, each with a capacity sufficient for 24 hours full load operation of all consumers
- 1 settling tank with a capacity sufficient for 36 hours full load operation of all consumers and automatic filling
- Settling tank temperature 70 - 90 °C

Day tank:

Two day tanks are required. The day tank capacity must cover at least 4 hours/max. 24 hours full load operation of all consumers. An overflow system into the settling tanks and sufficient insulation are required.

Guide values for temperatures

Fuel viscosity cSt/50 °C	Tank temperature [°C]
30 - 80	70 - 80
80 - 180	80 - 90
> 180 - 700	max. 98

Separators:

Caterpillar Motoren **recommends** to install **two** self-cleaning separators. Design parameters as per supplier recommendation. Separation temperature 98 °C! Maker and type are to be advised to Caterpillar Motoren.

9. Fuel oil system

Heavy fuel operation

Supply system (Separate components): A closed **pressurized system** between daytank and engine is required as well as the installation of an automatic back-flushing filter with a mesh size of 10 µm (absolute).

Strainer HF 2: Mesh size 0.32 mm

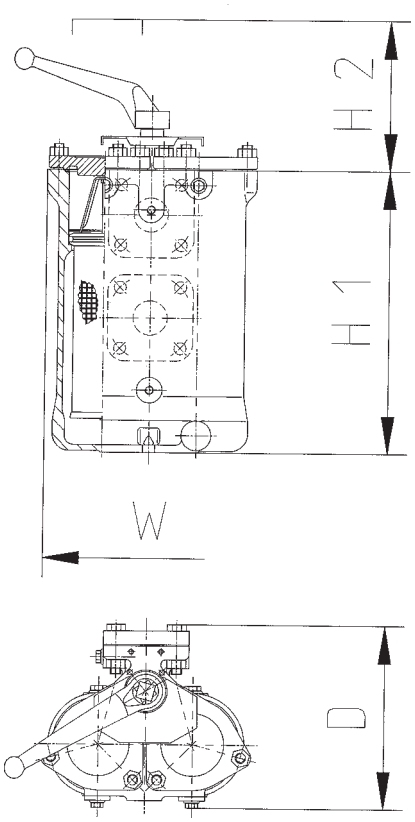

Output [kW]	DN	H1	H2	W	D
		mm			
≦ 10000	40	330	300	250	210
≦ 20000	65	523	480	260	355
> 20000	80	690	700	370	430

Pressurizing pumps HP 1/HP 2: Screw type pump with mechanical seal.
Installation vertical or horizontal. Delivery head 5 bar.

Capacity

$$\dot{V}\ [m^3/h] = 0{,}4 \cdot \frac{P_{eng.}\ [kW]}{1000}$$

9. Fuel oil system

Heavy fuel operation

Pressure regulating valve HR 1: Controls the pressure at the engine inlet, approx. 4 bar.

Engine outputs

≤ 8000 kW

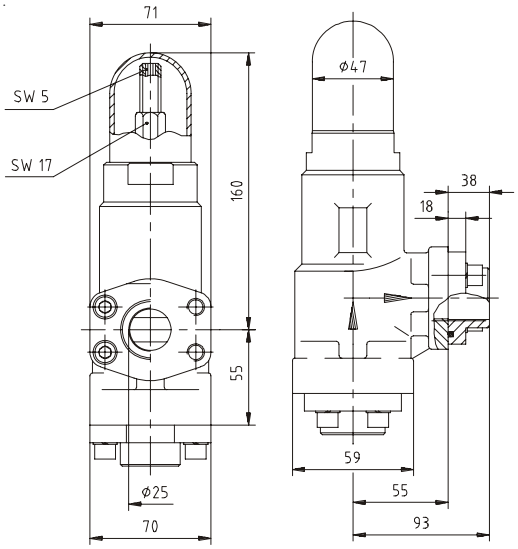

> 8000 kW

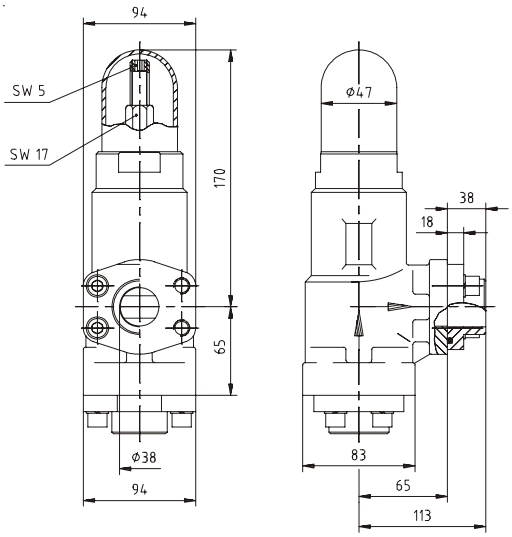

Self cleaning filter HF 4: Mesh size 10 µm sphere passing mesh, make Boll & Kirch*, **without** by-pass filter.

* In case of Caterpillar Motoren supply.

≤ 8000 kW, Type 6.60, DN 50

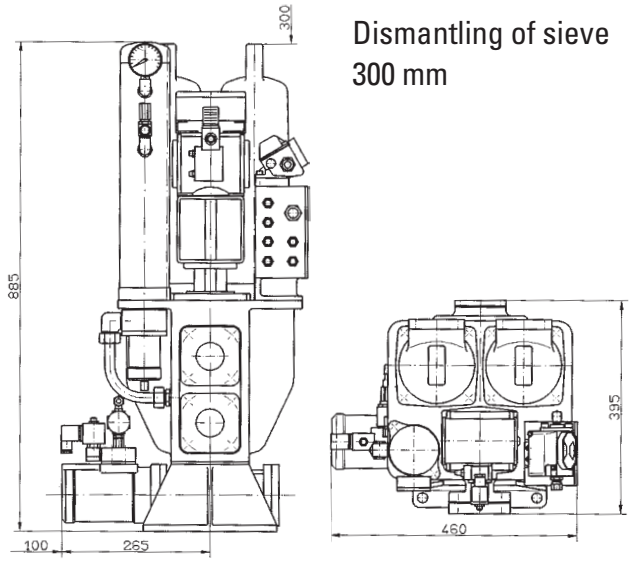

Dismantling of sieve 300 mm

> 8000 kW, Type 6.61, DN 100

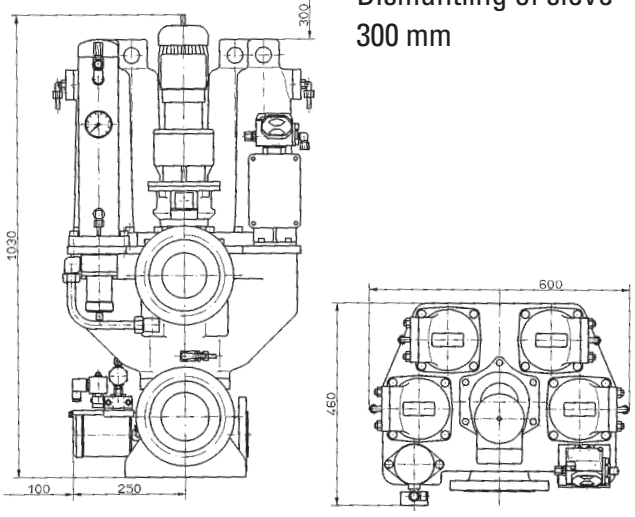

Dismantling of sieve 300 mm

9. Fuel oil system

Heavy fuel operation

Mixing tank (without insulation) HT 2:

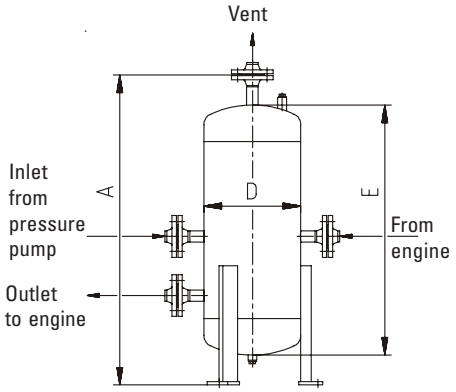

Engine output	Volume	Dimensions [mm]			Weight
[kW]	[l]	A	D	E	[kg]
≦ 10000	100	1700	323	1500	120
> 10000	200	1700	406	1500	175

Circulating pumps HP 3/HP 4:

Design see pressure pumps.

Capacity

$$\dot{V}\,[m^3/h] = 0.7 \cdot \frac{P_{eng.}\,[kW]}{1000}$$

Final preheater HH 1/HH 2:

Heating media:

- Electric current (max. surface power density 1.1 W/cm²)
- Steam
- Thermal oil

Temperature at engine inlet max 150 °C.

Viscosimeter HR 2:

Controls the injection viscosity to 10 - 12 cSt.

Fine filter (fitted) HF 1:

- Mesh size 34 µm
- **Without** heating
- Differential pressure indication and alarm contact fitted

9. Fuel oil system

Heavy fuel operation

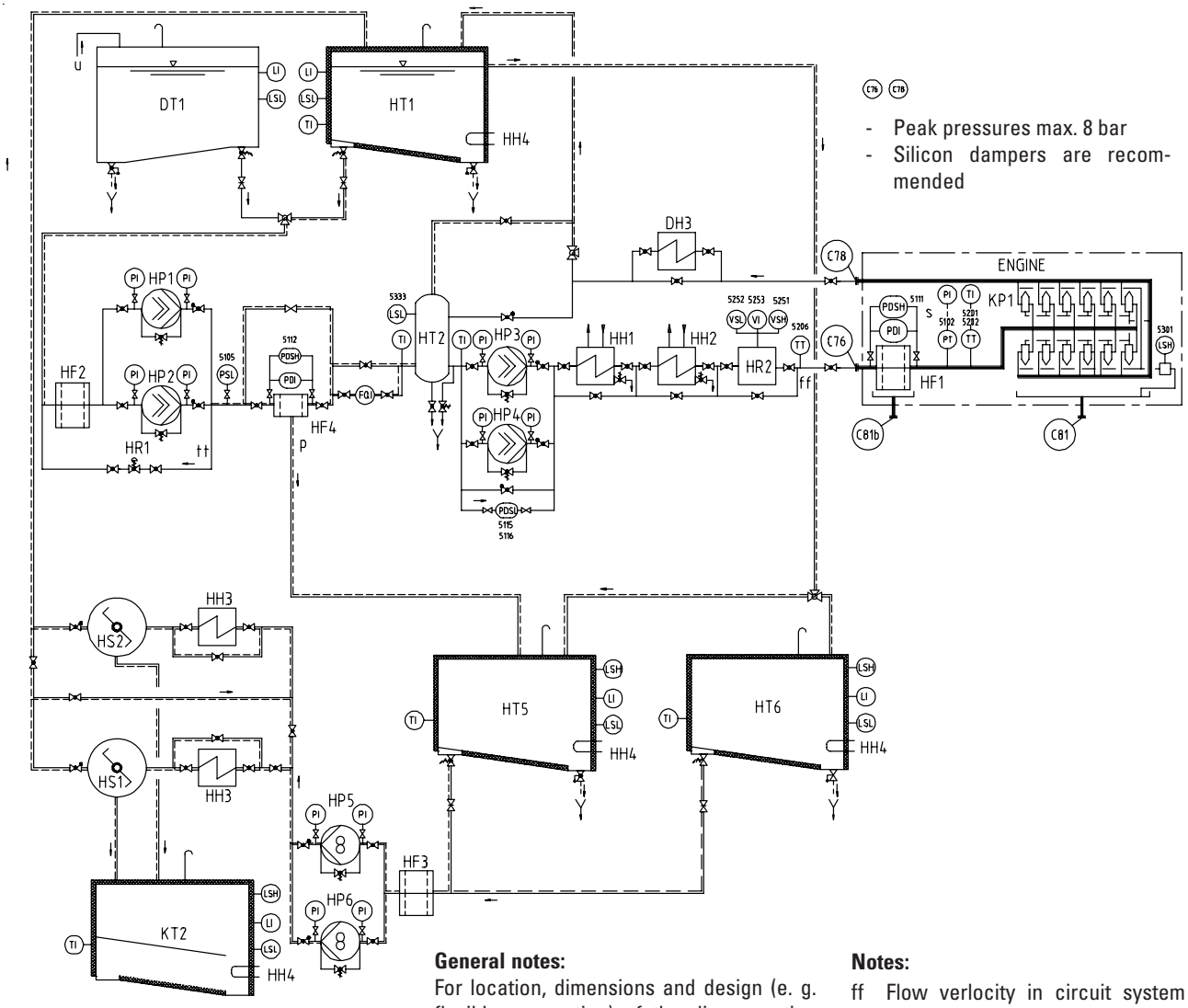

General notes:
For location, dimensions and design (e. g. flexible connection) of the disconnecting points see engine installation drawing. Valve fittings with loose cone are not accepted in the admission and return lines.

Notes:

ff Flow verlocity in circuit system ≤ 0.5 m/s
p Free outlet required
s Please refer to the measuring point list regarding design of the monitoring devices
tt not insulated nor heated pipe
u From diesel oil separator or diesel oil transfer pump

All heavy fuel pipes have to be insulated.
---- heated pipe

Accessories and fittings:

DH3	Gas oil cooler
DT1	Diesel oil day tank
HF1	Fine filter (duplex filter)
HF2	Primary filter
HF3	Coarse filter
HF4	Self cleaning fuel filter
HH1	Heavy fuel final preheater
HH2	Stand-by final preheater
HH3	Heavy fuel preheater (separator)
HH4	Heating coil
HP1/HP2	Pressure pump
HP3/HP4	Circulating Pump
HP5/HP6	Heavy fuel transfer pump (separator)
HR1	Pressure regulating valve
HR2	Viscometer
HS1/HS2	Heavy fuel separator
HT1	Heavy fuel day tank
HT2	Mixing tank
HT5/HT6	Settling tank
KP1	Injection pump
KT2	Sludge tank
FQI	Flow quantity indicator
LI	Level indicator
LSH	Level switch high
LSL	Level switch low
PDI	Diff. pressure indicator
PDSH	Diff. pressure switch high
PDSL	Diff. pressure switch low
PI	Pressure indicator
PSL	Pressure switch low
PT	Pressure transmitter
TI	Temperature indicator
TT	Temperature transmitter (PT 100)
VI	Viscosity indicator
VSH	Viscosity Control switch high
VSL	Viscosity Control switch low

Connecting points:

C76	Inlet duplex filter
C78	Fuel outlet
C81	Drip fuel
C81b	Drip fuel (filter pan)

MAK

9. Fuel oil system
Heavy fuel operation

Heavy fuel oil supply- and booster standard module

(Pressurized System), up to IFO 700 for steam and thermaloil heating, up to IFO 180 for electr. heating

Technical specification of the main components:

1. **Primary filter**

   1 pc. Duplex strainer 540 microns

2. **Fuel pressure pumps, vertical installation**

   2 pcs. Screw pumps with mechanical seal

3. **Pressure regulating system**

   1 pc. Pressure regulating valve

4. **Self cleaning fine filter**

   1 pc. Automatic self cleaning fine filter 10 microns absolut (without by-pass filter)

5. **Consumption measuring system**

   1 pc. Flowmeter with local totalizer

6. **Mixing tank with accessories**

   1 pc. Pressure mixing tank — approx. 49 l volume up to 4000 kW
   approx. 99 l volume from 4001 - 20000 kW
   (with quick-closing valve)

7. **Circulating pumps, vertical installation**

   2 pcs. Screw pumps with mechanical seal

8. **Final preheater**

   2 pcs. Shell and tube heat exchangers — each 100 % (saturated 7 bar or thermal oil 180 °C)
   each 100 % electrical

9. Fuel oil system
Heavy fuel operation

9. a) Heating medium control valve (steam/thermaloil)
b) Control cabinet (electrical)

1 pc. control valve with built-on positioning drive 1 pc. control cabinet for electr. preheater

10. Viscosity control system

1 pc. automatic viscosity measure and control system VAF

Module controlled automatically with alarms and starters
Pressure pump starters with stand-by automatic
Circulating pump starters with stand-by automatic
PI-controller for viscosity controlling
Starter for the viscosimeter
Analog output signal 4 - 20 mA for viscosity

Alarms
Pressure pump stand-by start
Low level in the mixing tank
Circulating pump stand-by start
Self cleaning fine filter pollution
Viscosity alarm high/low
The alarms with potential free contacts

Alarm cabinet with alarms to engine control room and connection possibility for remote start/stop and indicating lamp of fuel pressure and circulating pumps

Performance and materials:
The whole module is tubed and cabled up to the terminal strips in the electric switch boxes which are installed on the module. All necessary components like valves, pressure switches, thermometers, gauges etc. are included. The fuel oil pipes are equipped with trace heating (steam, thermaloil or electrical) where necessary.
The module will be tested hydrostatical and functional in the workshop without heating.

	Steam Thermal oil	Electric	Steam Thermal oil	Steam Thermal oil	Thermal oil
For power in kW up to (50/60 Hz)	8000/9600	8000/9600	12000/14400	20000/24000	30000/36000
Length in mm	3200	3500	3500	3500	6000
Width in mm	1200	1200	1350	1500	1700
Height in mm	2000	2000	2000	2000	2000
Weight (approx.) in kg	2500	2700	3100	3600	4600

9. Fuel oil system

Heavy fuel operation

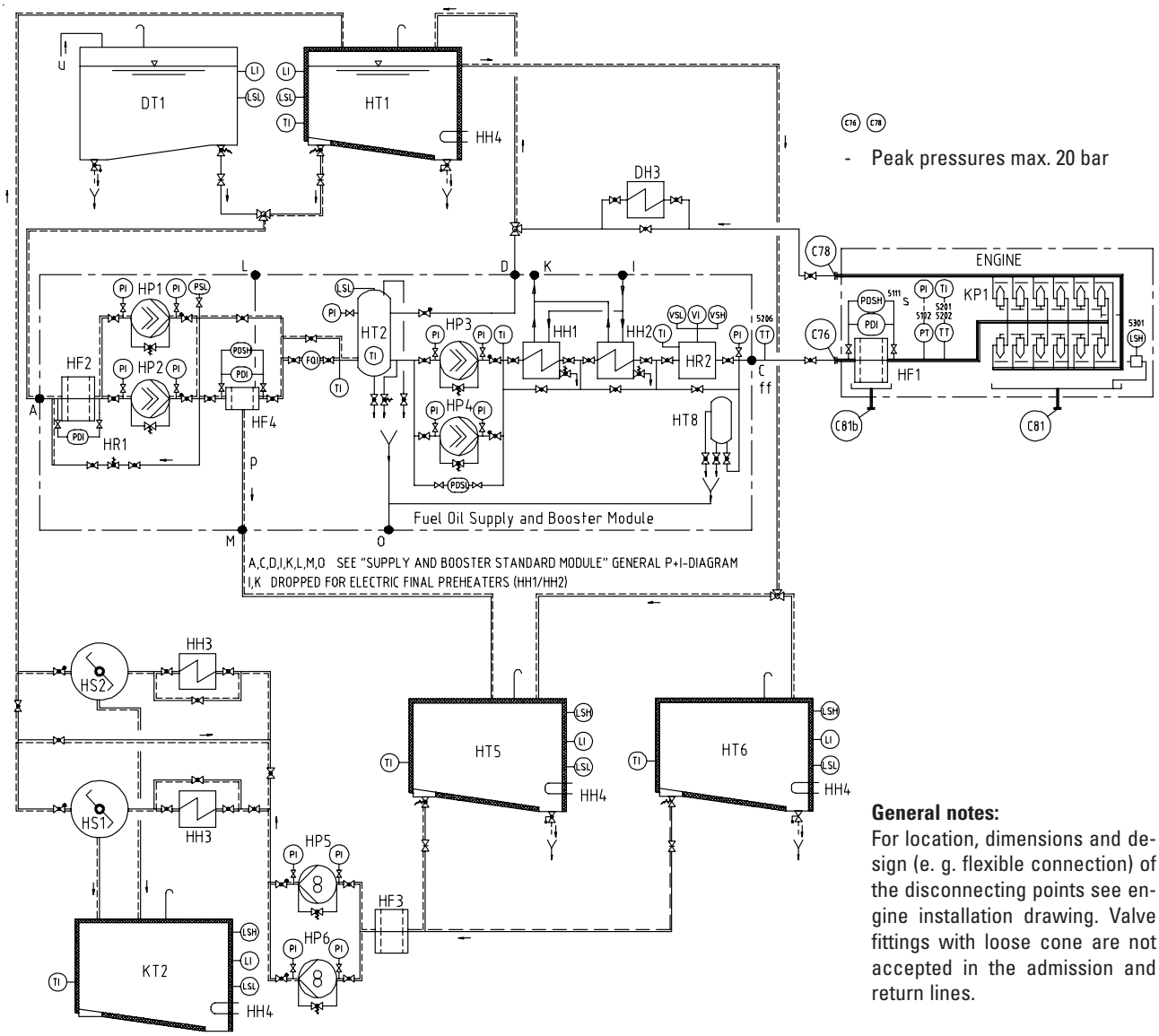

- Peak pressures max. 20 bar

General notes:
For location, dimensions and design (e. g. flexible connection) of the disconnecting points see engine installation drawing. Valve fittings with loose cone are not accepted in the admission and return lines.

Accessories and fittings:

DH3	Gas oil cooler
DT1	Diesel oil day tank
HF1	Fine filter (duplex filter)
HF2	Primary filter
HF3	Coarse filter
HF4	Self cleaning fuel filter
HH1	Heavy fuel final preheater
HH2	Stand-by final preheater
HH3	Heavy fuel preheater (separator)
HH4	Heating coil
HP1/HP2	Pressure pump
HP3/HP4	Circulating Pump
HP5/HP6	Heavy fuel transfer pump (separator)
HR1	Pressure regulating valve
HR2	Viscometer
HS1/HS2	Heavy fuel separator
HT1	Heavy fuel day tank
HT2	Mixing tank
HT5/HT6	Settling tank
HT8	Compensation damping tank
KP1	Injection pump
KT2	Sludge tank
FQ1	Flow quantity indicator
LI	Level indicator
LSH	Level switch high
LSL	Level switch low
PDI	Diff. pressure indicator
PDSH	Diff. pressure switch high
PDSL	Diff. pressure switch low
PI	Pressure indicator
PSL	Pressure switch low
PT	Pressure transmitter
TI	Temperature indicator
TT	Temperature transmitter (PT 100)
VI	Viscosity indicator
VSH	Viscosity Control switch high
VSL	Viscosity Control switch low

Notes:

ff	Flow verlocity in circuit system ≤ 0.5 m/s
p	Free outlet required
s	Please refer to the measuring point list regarding design of the monitoring devices
tt	not insulated nor heated pipe
u	From diesel oil separator or diesel oil transfer pump

All heavy fuel pipes have to be insulated.
---- heated pipe

Connecting points:

C76	Inlet duplex filter
C78	Fuel outlet
C81	Drip fuel
C81b	Drip fuel (filter pan)

MaK

10. Lubricating oil system

Lube oil quality

The viscosity class SAE 40 is required.

Wear and tear and thus the service life of the engine depend on the lube oil quality. Therefore high requirements are made for lubricants:

Constant uniform distribution of the additives at all operating conditions. Perfect cleaning (detergent effect) and dispersing power, prevention of deposits from the combustion process in the engine. Sufficient alkalinity in order to neutralize acid combustion residues. The TBN (total base number) must be between 30 and 40 KOH/g at HFO operation. For MDO operation the TBN is 12 - 20 depending on sulphur content.

Manufacturer	Diesel oil/Marine-diesel oil operation	I	II	HFO operation	I	II
AGIP	DIESEL SIGMA S CLADIUM 120		X X	CLADIUM 300 S CLADIUM 400 S	X X	
BP	ENERGOL DS 3-154 VANELLUS C 3	X	 X	ENERGOL IC-HFX 304 ENERGOL IC-HFX 404	X X	
CALTEX	DELO 1000 MARINE DELO 2000 MARINE	X X		DELO 3000 MARINE DELO 3400 MARINE	X X	
CASTROL	MARINE MLC MXD 154 TLX PLUS 204	X X	 X	TLX PLUS 304 TLX PLUS 404	X X	
CEPSA	KORAL 1540		X			
CHEVRON	DELO 1000 MARINE OIL DELO 2000 MARINE OIL	X X		DELO 3000 MARINE OIL DELO 3400 MARINE OIL	X X	
TOTAL LUBMARINE	DISOLA M 4015 AURELIA 4030	X X		AURELIA XL 4030 AURELIA XT 4040	X X	
ESSO	EXXMAR 12 TP EXXMAR CM+ ESSOLUBE X 301	X	 X X	EXXMAR 30 TP EXXMAR 40 TP EXXMAR 30 TP PLUS EXXMAR 40 TP PLUS	X X X	 X
MOBIL	MOBILGARD 412 MOBILGARD ADL MOBILGARD M 430 MOBILGARD 1-SHC [1]	X X X	 X	MOBILGARD M 430 MOBILGARD M 440	X X	
SHELL	GADINIA GADINIA AL ARGINA S ARGINA T	X X X X		ARGINA T ARGINA X	X X	
TEXACO	TARO 16 XD TARO 12 XD TARO 20 DP	X X X		TARO 30 DP TARO 40 XL	X X	

I Approved in operation

II Permitted for controlled use
When these lube oils are used, Caterpillar Motoren must be informed because at the moment there is insufficient experience available for MaK-engines. Otherwise the warranty is invalid.

[1] Synthetic oil with a high viscosity index (SAE 15 W/40). Only permitted if the oil inlet temperatures can be decreased by 5 - 10 °C.

10. Lubricating oil system

Lube oil quantities/- change intervals:

Circulating quantity:
approx. 1.3 l/kW output with separate tank

The change intervals depend on:
- the quantity
- fuel quality
- quality of lube oil treatment (filter, separator)
- engine load

By continuous checks of lube oil samples (decisive are the limit values as per "MaK Operating Media") an optimum condition can be reached.

Force pump (fitted) LP 1:

Gear type pump

Lube oil stand-by force pump (separate) LP 2:

- principle per engine according to classification requirement
- screw type/gear type pump

Strainer (separate) LF 4:

Mesh size 2 - 3 mm
to be supplied by the yard.

Self cleaning filter (separate) LF 2:

Mesh size 30 µm sphere passing mesh, type 6.46, make Boll & Kirch*. **Without** by-pass filter. **Without** flushing oil treatment.

* In case of Caterpillar Motoren supply.

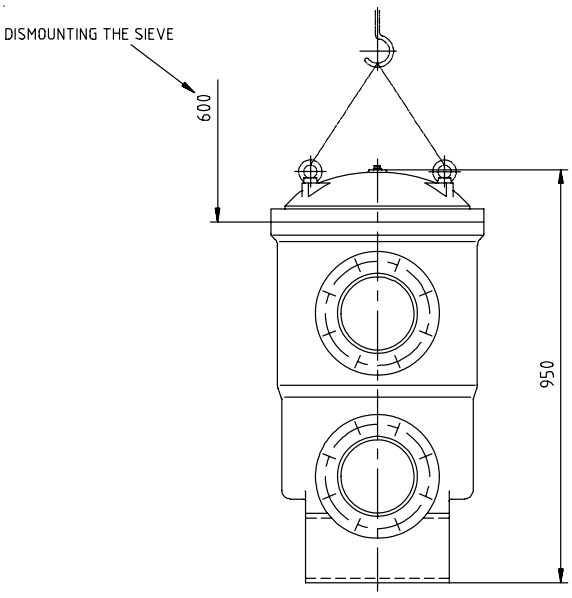

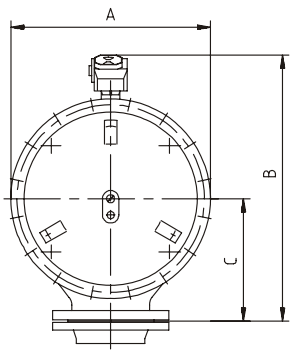

	DN	A	B	C	Weight [kg]
12 M 32 C	125	440	580	260	195
16 M 32 C	150	490	655	300	250

10. Lubricating oil system

Duplex filter (separate) LF 1: Mesh size 80 µm
Differential pressure indication and alarm contact fitted.
To be installed as close as possible to the engine.

Protection strainer (fitted) LF 3: Mesh size 320 µm
Location at the free end of the engine

Cooler (separate) LH 1: Plate type (plates made of stainless steel)

Temperature controller (separate) LR 1: P-controller with manual emergency adjustment

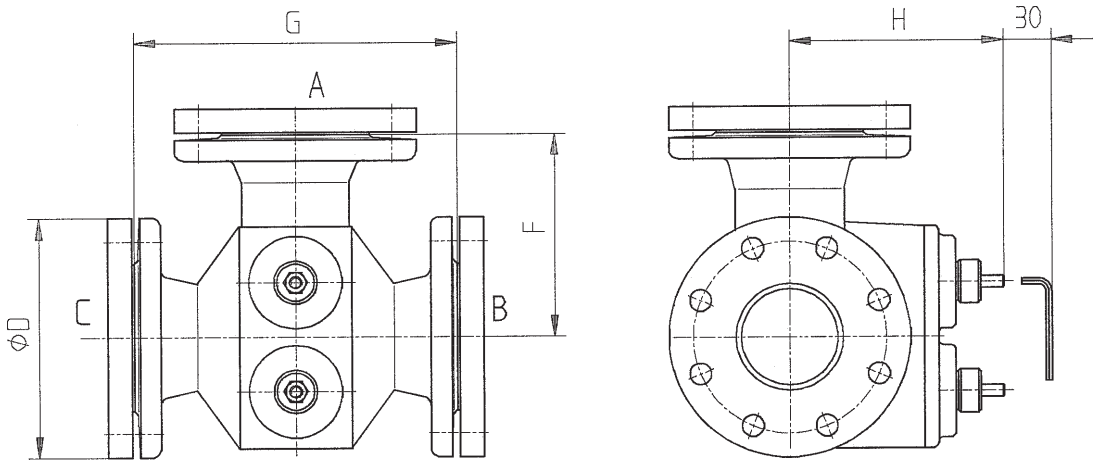

	Dimensions [mm]					Weight
	DN	D	F	G	H	[kg]
12 M 32 C	125	250	241	489	200	67
16 M 32 C	150	285	254	489	200	80

Discharge to circulating tank: DN 300 at driving end or free end. Compensator to be supplied by the **yard.**

Circulation tank: Volume

$$V\,[m^3] = \frac{1.7 \cdot P_{eng.}\,[kW]}{1000}$$

Oil filling approx. 80 % of tank volume.

10. Lubricating oil system

Recommendation of pipe location in the circulating tank

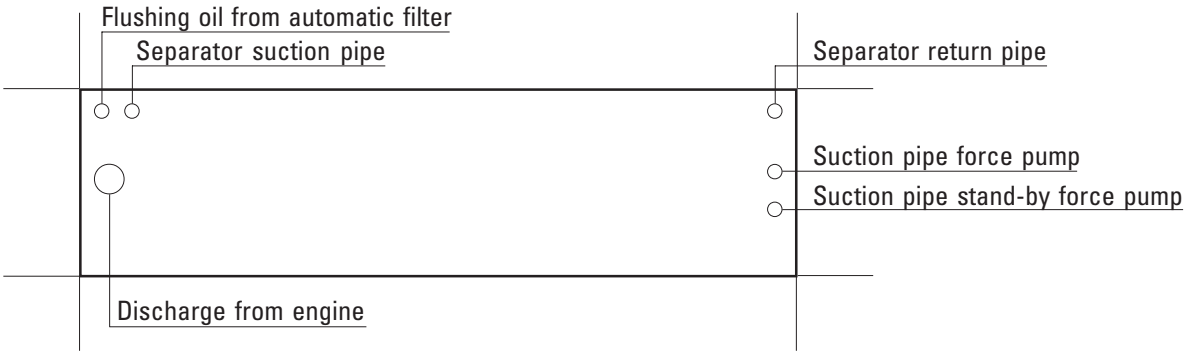

Crankcase ventilation:

The location of the ventilation is on top of the engine block near to the turbocharger (see system connections C 91).

The vent pipe DN 125 has to enlarged to DN 150 approx. 1 m after the connection point. It must be equipped with a condensate trap and drain. It has to be arranged separately for each engine.

Treatment at MGO/MDO operation

Separator LS 1:

Required with the following design:
- Separating temperature 85 - 95 °C
- Quantity to be cleaned three times/day
- Self cleaning type

V_{eff} [l/h] = 0.18 · P_{eng} [kW]

Treatment at HFO operation

Separator LS 1:

Required with the following design:
- Separating temperature 95 °C
- Quantity to be cleaned five times/day
- Self cleaning type

V_{eff} [l/h] = 0.29 · P_{eng} [kW]

10. Lubricating oil system

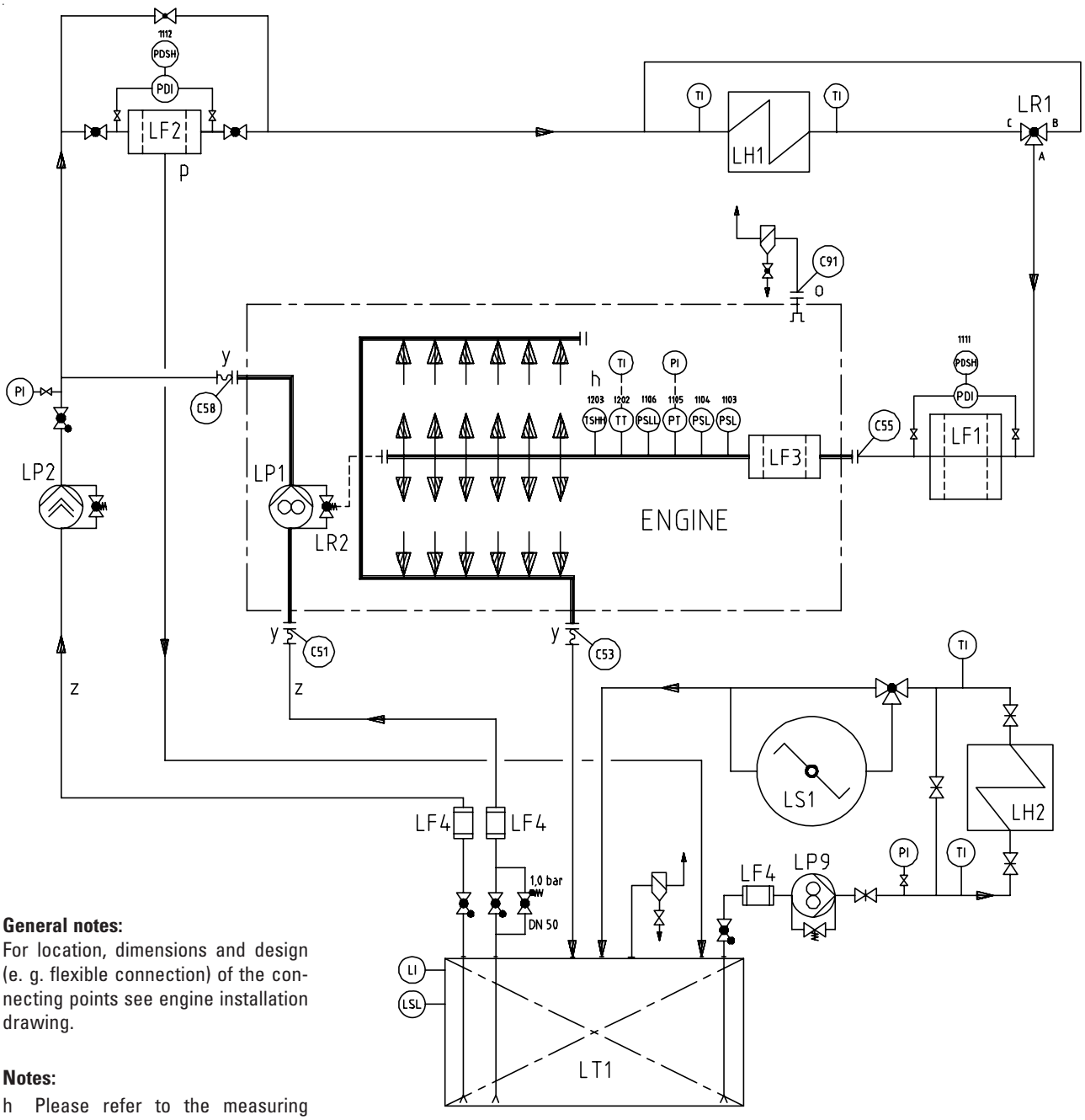

General notes:
For location, dimensions and design (e. g. flexible connection) of the connecting points see engine installation drawing.

Notes:

h Please refer to the measuring point list regarding design of the monitoring devices
o See "crankcase ventilation" installation instructions
p Free outlet required
y Provide an expansation joint

Connecting points:

C51	Force pump, suction side
C53	Luboil discharge
C55	Luboil, protection strainer
C58	Force pump, delivery side
C91	Crankcase ventilation to stack

Accessories and fittings:

LF1	Duplex luboil filter
LF2	Luboil automatic filter
LF3	Protection strainer
LF4	Suction strainer
LH1	Luboil cooler
LH2	Luboil preheater
LP1	Luboil force pump
LP2	Luboil stand-by force pump
LP9	Transfer pump (separator)
LR1	Luboil thermostat valve
LR2	Oil pressure regulating valve
LS1	Luboil separator
LT1	Luboil sump tank
LI	Level indicator
LSL	Level switch low
PDI	Diff. pressure indicator
PDSH	Diff. pressure switch high
PI	Pressure indicator
PSL	Pressure switch low
PT	Pressure transmitter
TI	Temperature indicator
TSHH	Temperature switch high
TT	Temperature transmitter (PT 100)

11. Cooling water system

The heat generated by the engine (cylinder, charge air and lube oil) is to be carried out off by means of treated freshwater acc. to the MaK coolant regulations.

The inlet temperature in the LT-circuit is max. 38 °C.

Two-circuit cooling: with two-stage charge air cooler.

LT-cooling water pump (separate) FP 4/FP 6

HT-cooling water pump (separate) FP 3/FP 5: Option: **fitted**

HT-temperature controller (separate) FR 1: P-controller with manual emergency adjustment (basis). Option: PI-controller with electric drive. See charge air thermostat.

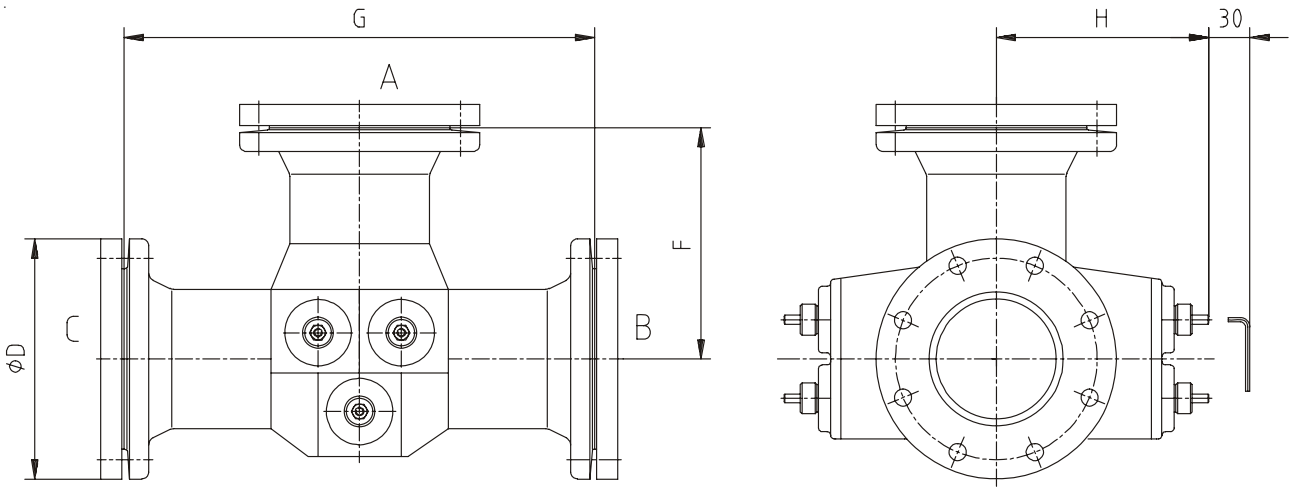

		Dimensions [mm]					Weight
		DN	D	F	G	H	[kg]
12/16 M 32 C	HT	125	250	241	489	200	67
12 M 32 C	LT	125*	250	241	489	200	67
16 M 32 C	LT	150*	285	254	489	200	80

* Minimum, depending on total cooling water flow

11. Cooling water system

LT-temperature controller (separate) FR 2:

P-controller with manual emergency adjustment (basis). Option: PI-controller with electric drive.
See charge air thermostat.

Preheater (separate) FH 5/FP 7:

Consisting of circulating pump (8 m^3/h), electric heater (45 kW) and switch cabinet. Voltage 400 - 480, frequency 50/60 Hz. Weight 145 kg.

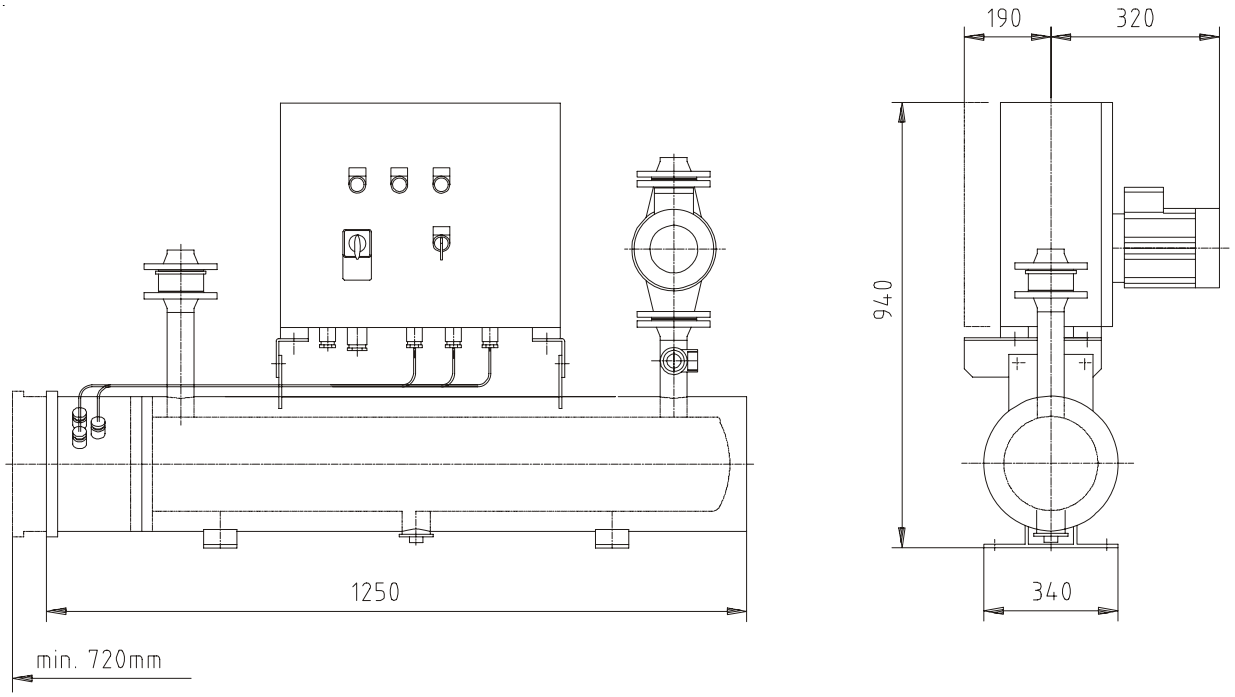

Charge-air heating:

Control unit for charge air heating in part load condition with electric/pneumatic 2 position flap.

MaK

11. Cooling water system

HT-cooler (separate) FH 1: Plate type (plates made of titanium), size depending on the total heat to be dissipated.

LT-cooler (separate) FH 2: Plate type (plates made of titanium), size depending on the total heat to be dissipated.

Header tank FT 1/FT 2:

- Arrangement: min. 4 m above crankshaft centre line.
- Size acc. to technical engine data, in case of several engines + 25 % volume per engine.
- All continuous vents from engine are to be connected.

Drain tank with filling pump: is recommended to collect the treated water when carrying out maintenance work (to be installed by the yard).

Electric motor driven pumps: Option for fresh and seawater , vertical design.
Rough calculation of power demand for the electric balance.

$$P = \frac{\rho \cdot H \cdot \dot{V}}{367 \cdot \eta} \quad [kW]$$

P - Power [kW]
P_M - Power of electr. motor [kW]
$\dot{V}$ - Flow rate [m^3/h]
H - Delivery head [m]
ρ - Density [kg/dm^3]
η - Pump efficiency
0,70 for centrifugal pumps

PM = 1,5 · P	< 1,5 kW
PM = 1,25 · P	1,5 - 4 kW
PM = 1,2 · P	4 - 7,5 kW
PM = 1,15 · P	> 7,5 - 40 kW
PM = 1,1 · P	> 40 kW

11. Cooling water system

Heat balance 12 M 32 C, 5760 kW

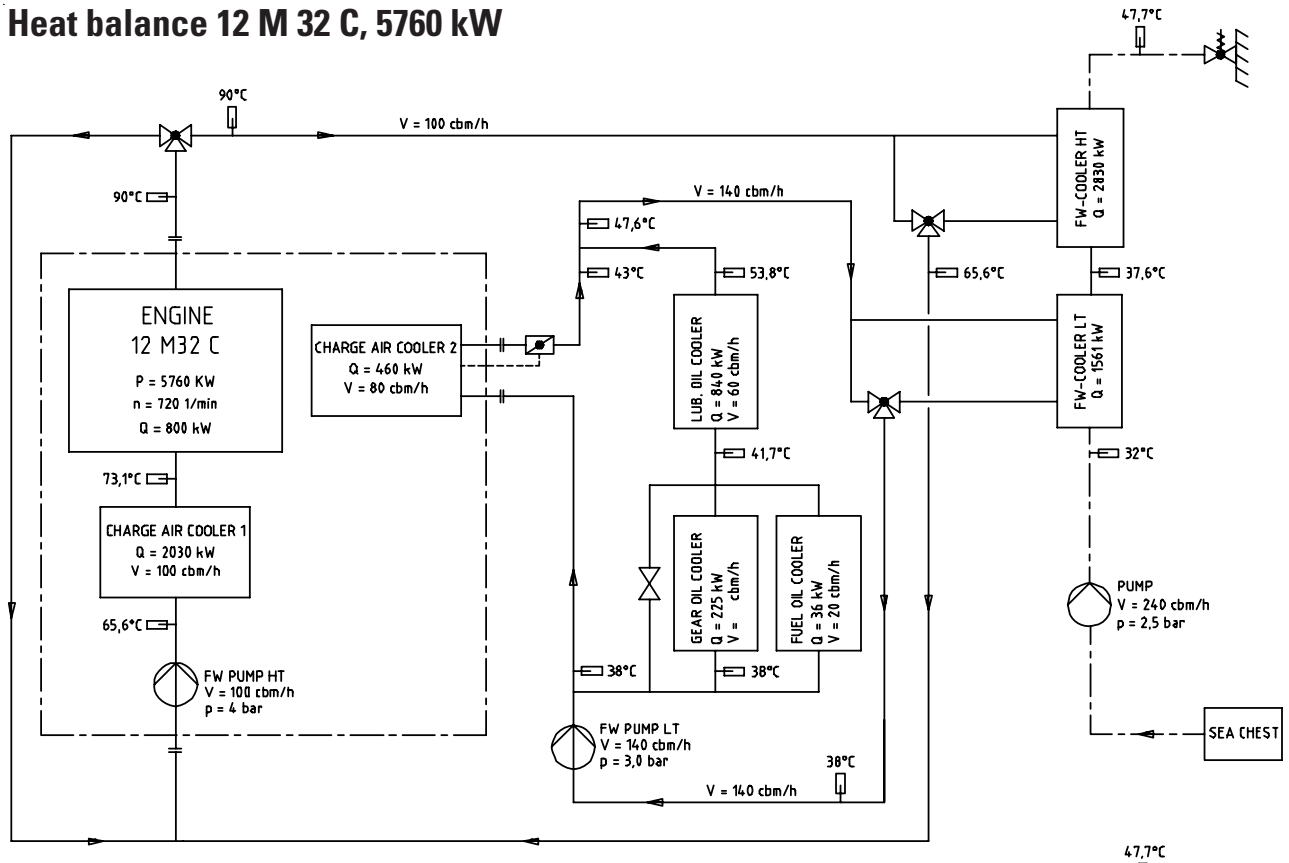

Heat balance 12 M 32 C, 6000 kW

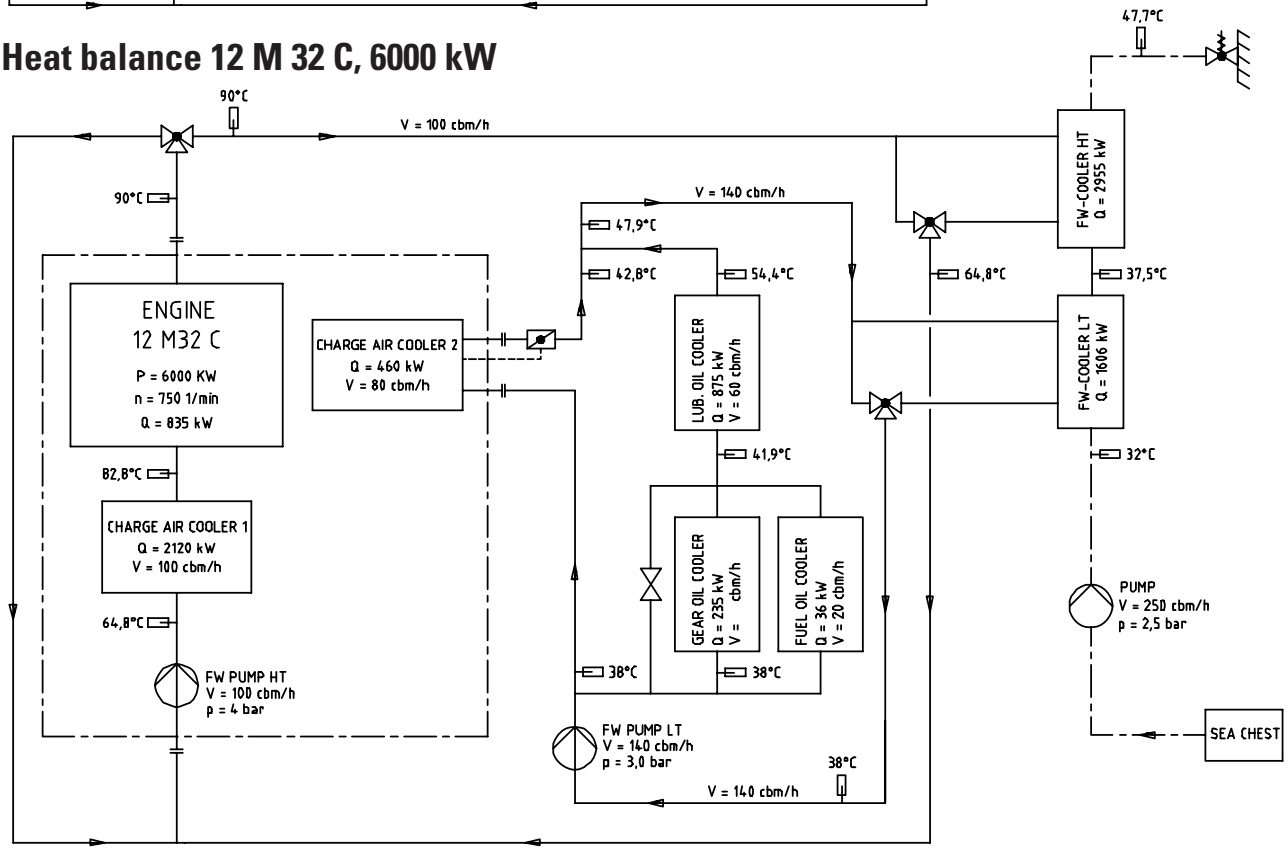

11. Cooling water system

Heat balance 16 M 32 C, 7680 kW

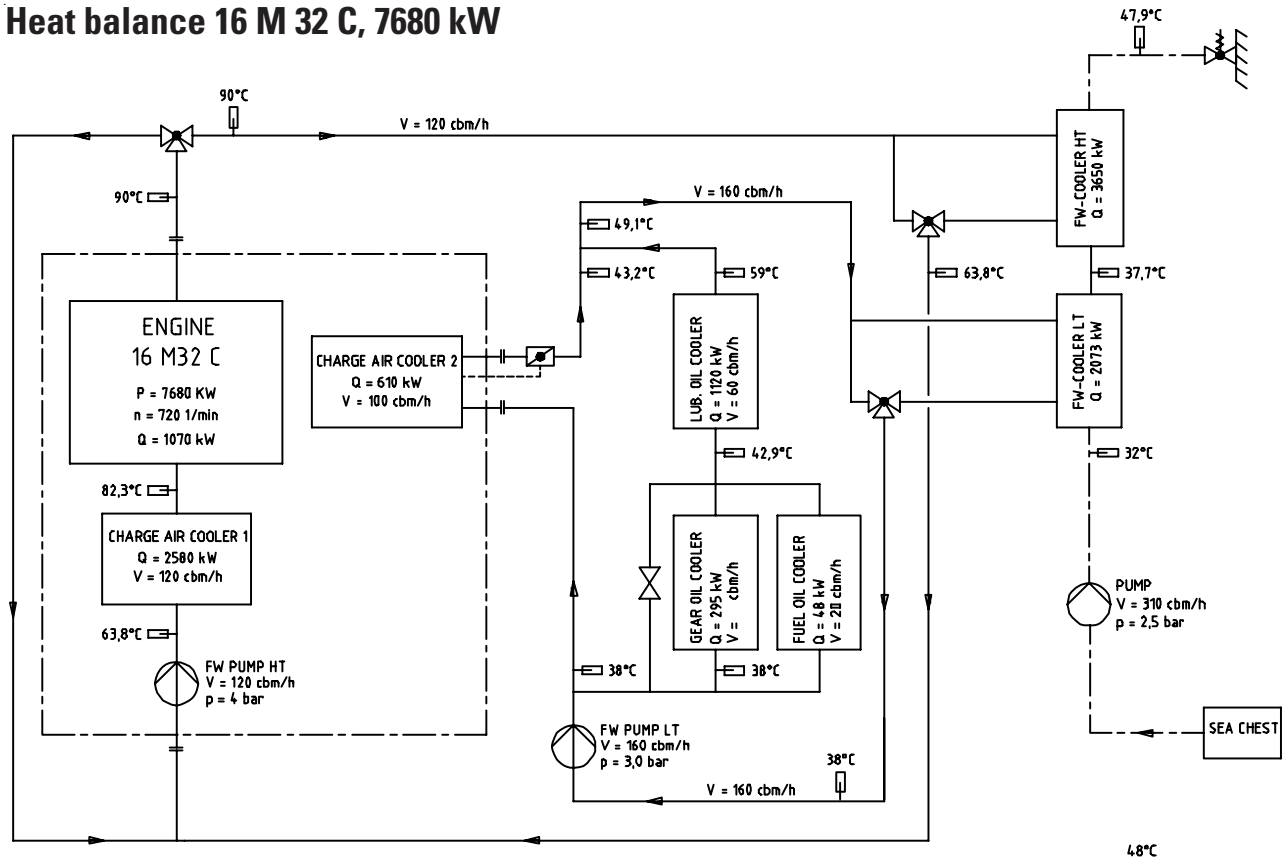

Heat balance 16 M 32 C, 8000 kW

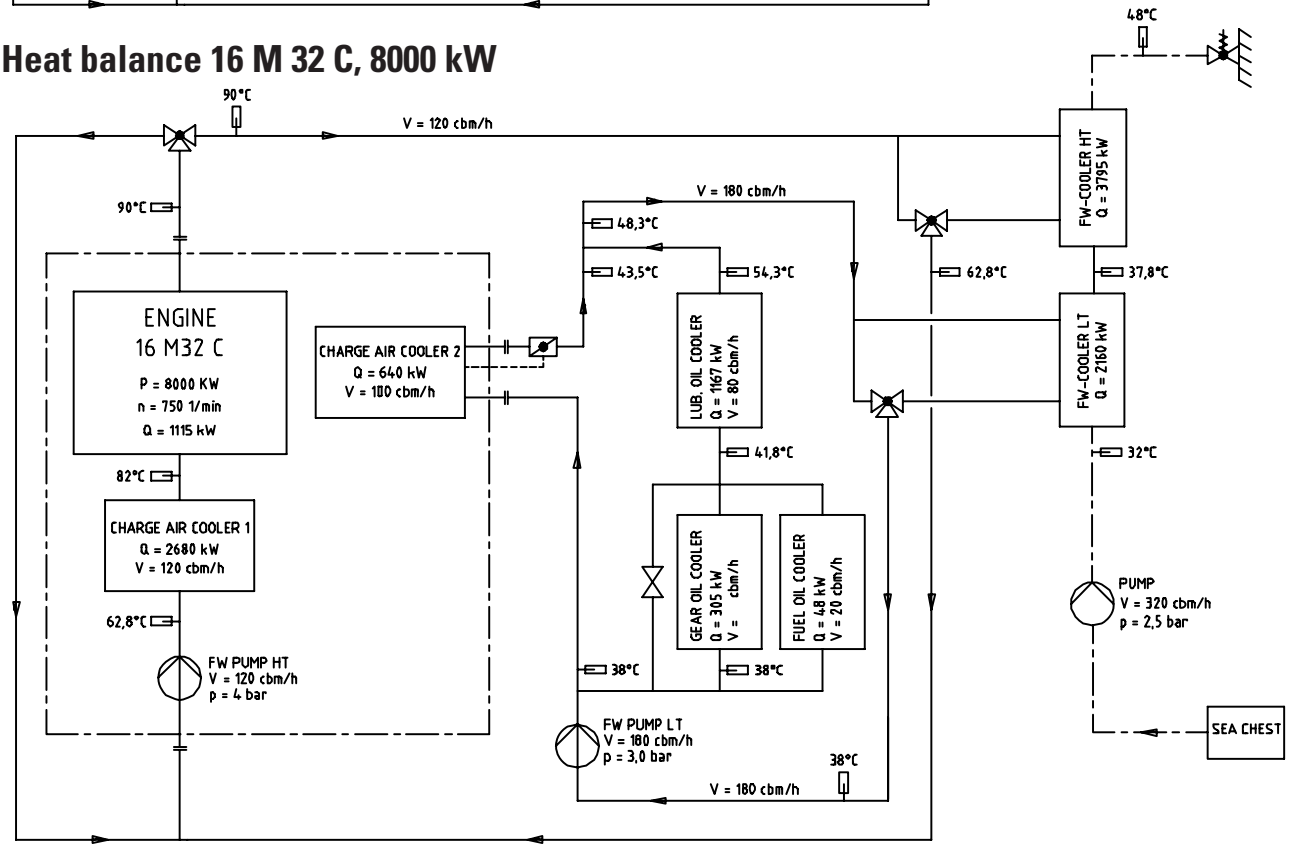

11. Cooling water system

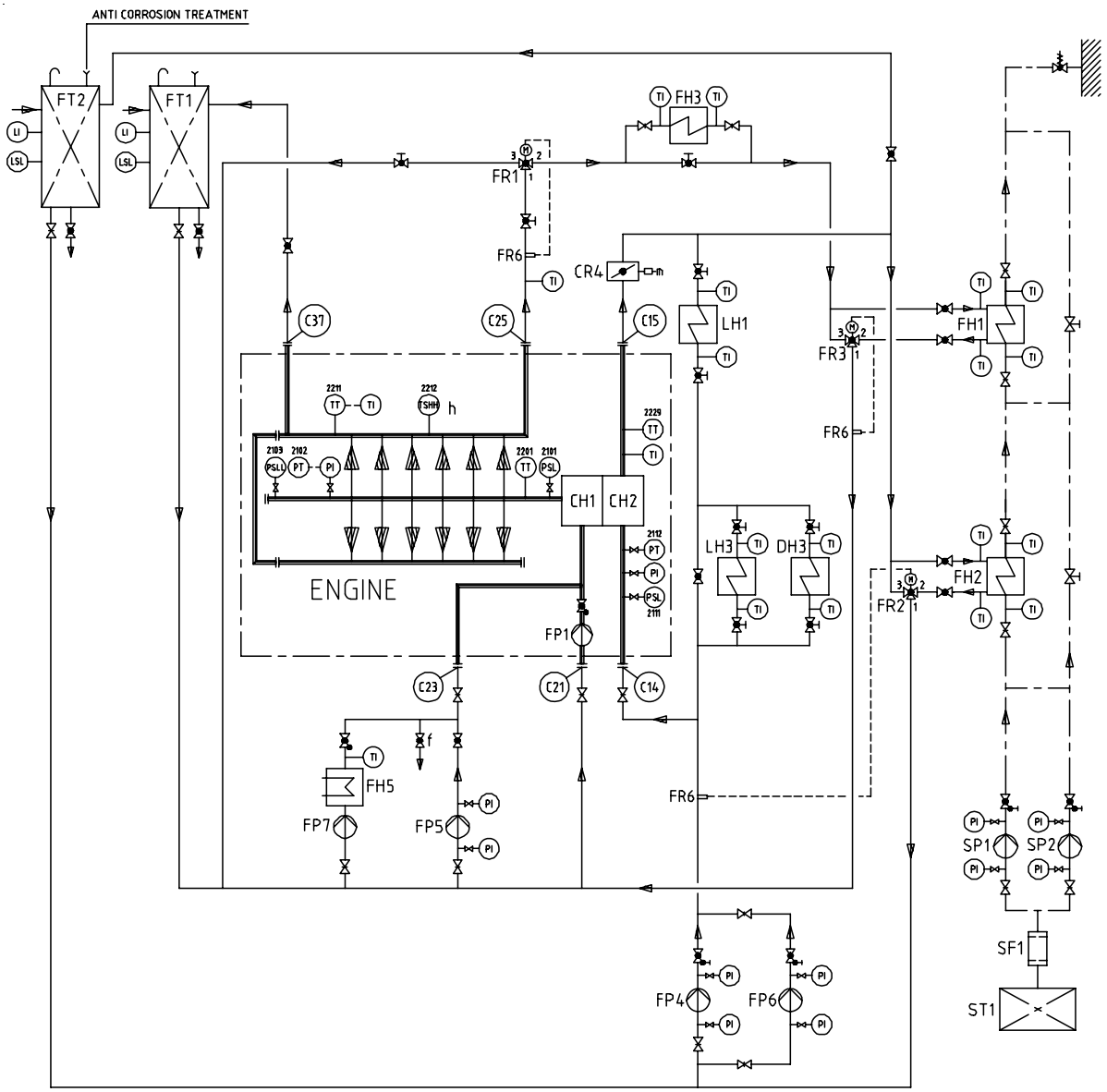

Accessories and fittings:

CH1	Charge air cooler HT
CH2	Charge air cooler LT
CR4	Valve for charge air preheating
DH3	MDO preheater
FH1	Freshwater cooler HT
FH2	Freshwater cooler LT
FH3	Heat Consumer
FH5	Freshwater preheater
FP1	Freshwater pump (fitted on engine) HT
FP4	Freshwater pump (separate) LT
FP5	Freshwater stand-by pump HT
FP6	Freshwater stand-by pump LT
FP7	Preheating pump
FR1	Temperature control valve HT
FR2	Temperature control valve LT
FR3	Temperature control valve HT
FR6	Sensor for temperature control valve
FT1	Compensation tank HT
FT2	Compensation tank LT
LH1	Luboil cooler
LH3	Gear luboil cooler
SF1	Seawater filter
SP1	Seawater pump
SP2	Seawater stand-by pump
ST1	Sea chest
LI	Level indicator
LSL	Level switch low
PI	Pressure indicator
PSL	Pressure switch low
PSLL	Pressure switch low
PT	Pressure transmitter
TI	Temperature indicator
TSHH	Temperature switch high
TT	Temperature transmitter (PT 100)

Notes:

f Drain

h Please refer to the measuring point list regarding design of the monitoring devices

m Air supply 2 - 10 bar

Connecting points:

C14 Charge air cooler LT, inlet
C15 Charge air cooler LT, outlet
C21 Freshwater pump HT, inlet
C23 Stand-by pump HT, inlet
C25 Cooling water, engine outlet
C37 Vent

General notes:

For location, dimensions and design (e. g. flexible connection) of the disconnecting points see engine installation drawing.

12. Flow velocities in pipes

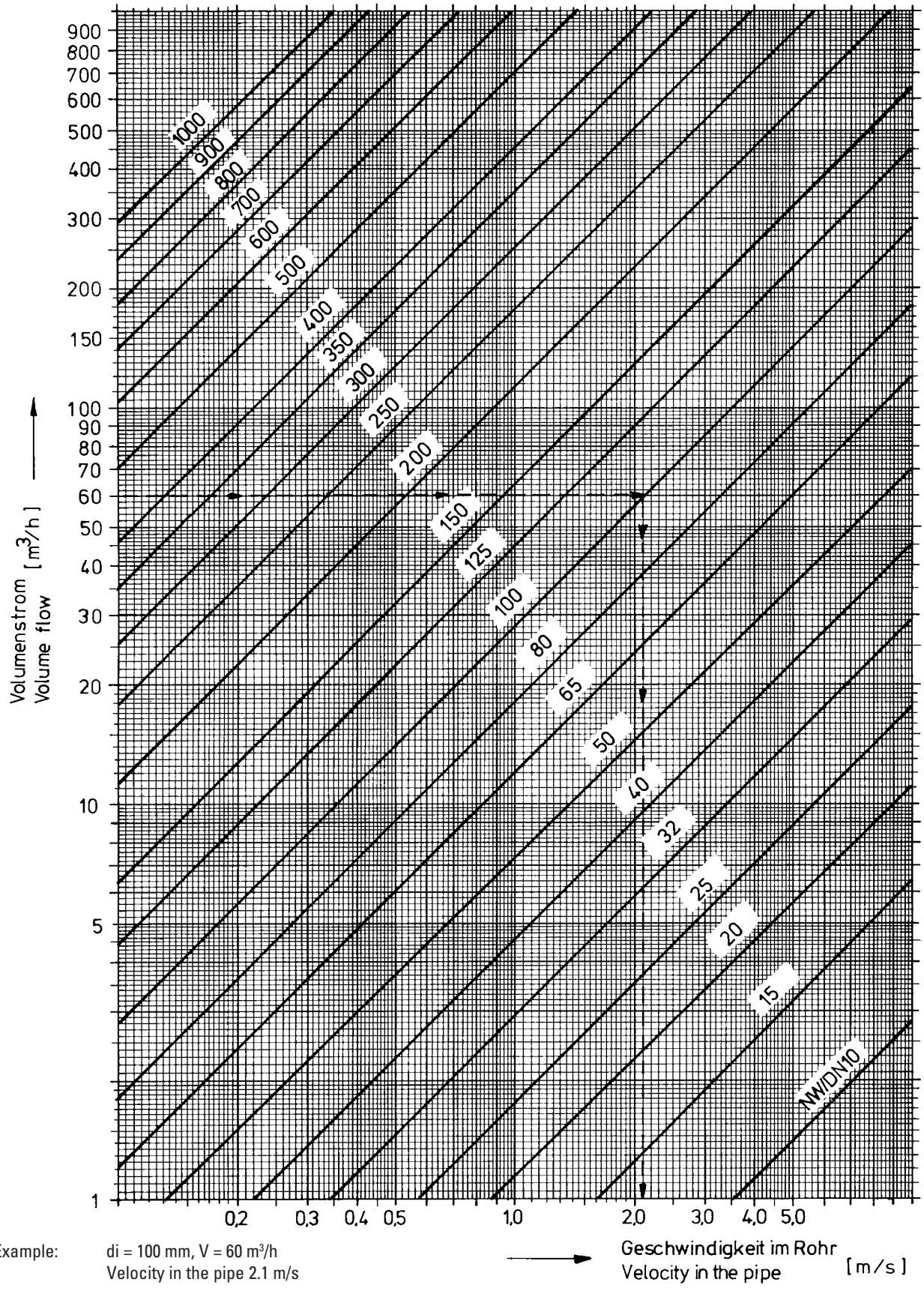

Example: di = 100 mm, V = 60 m³/h
Velocity in the pipe 2.1 m/s

13. Starting air system

Requirement of Classification Societies (regarding design)

- No. of starts: 6
- No. of receivers: min. 2

Receiver capacity acc. to GL recommendation AT 1/AT 2

Single-engine plant 2 x 250 l
Twin-engine plant 2 x 500 l

Receiver capacity [l]	L mm	D Ø mm	Valve head	Weight approx. kg
250	1868	480	DN 38	230
500	3355	480	DN 50	320
1000	3670	650	DN 50	620

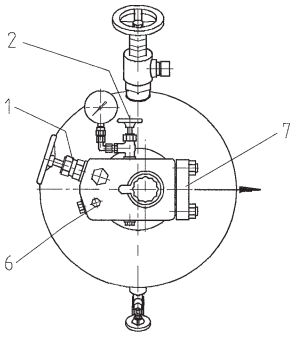

1 Filling valve DN 18
2 Pressure gauge G 1/4
3* Relief valve DN 7
4 Drain valve DN 8
5 Drain valve DN 8 (for vertical position)
6 Connection aux. air valve G1/2
7 To starting valve at engine
8 Typhon valve DN 16

Option:
* with pipe connection G 1/2

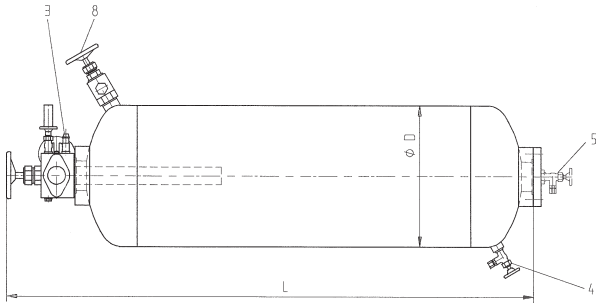

When CO_2 fire extinguishing plants are arranged in the engine room, the blow-off connection of the safety valve is to be piped to the outside.

13. Starting air system

Compressor AC 1/AC 2:

2 compressors with a total output of 50 % each are required.

The filling time from 0 to 30 bar must not exceed 1 hour.

Capacity

$\dot{V}$ [m³/h] = $\Sigma V_{Rec.} \cdot 30$

$V_{Rec.}$ - Total receiver volume [m³]

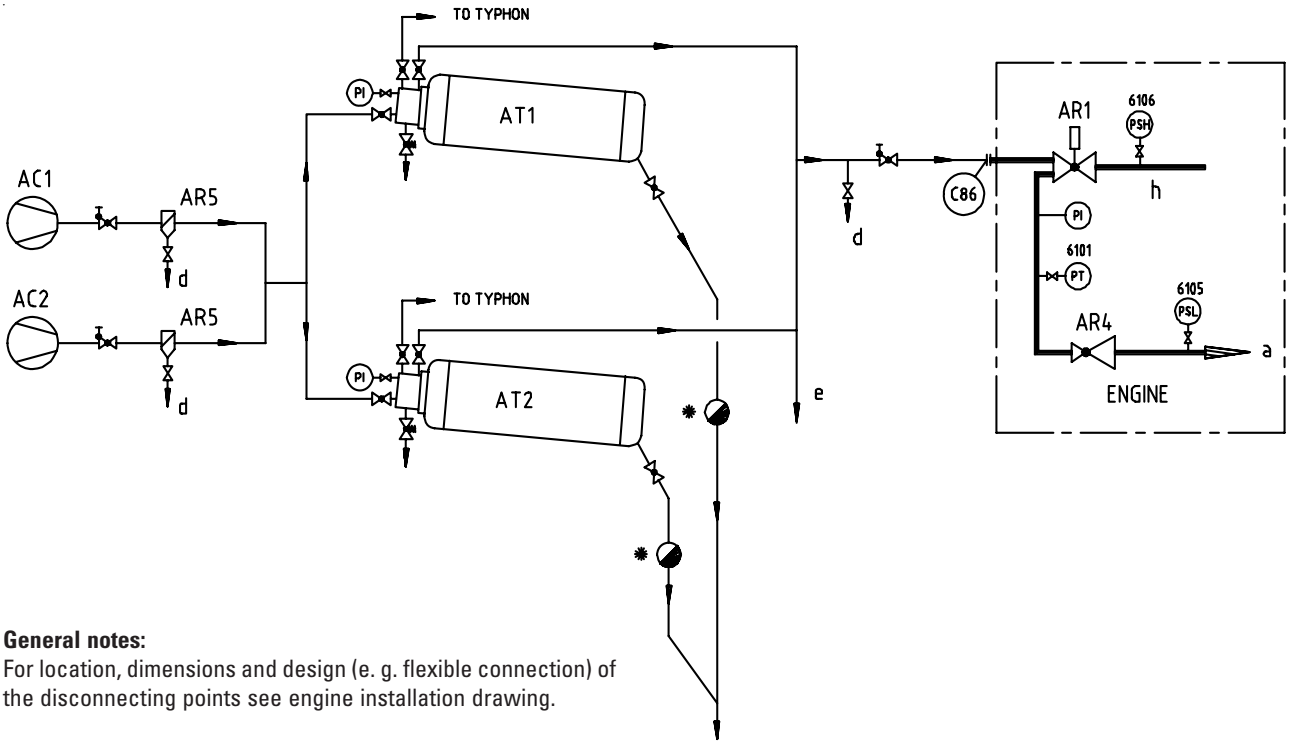

General notes:
For location, dimensions and design (e. g. flexible connection) of the disconnecting points see engine installation drawing.

Clean and dry starting air is required. A starting air filter has to be installed before engine, if required.

The air receivers are to be drained sufficiently at least once per day.

* Automatic drain required

Notes:
a Control air
d Water drain (to be mounted at the lowest point)
e To engine no. 2
h Please refer to the measuring point list regarding design of the monitoring devices

Connecting points:
C86 Connection, starting air

Accessories and fittings:
AC1 Compressor
AC2 Stand-by compressor
AR1 Starting valve
AR4 Pressure reducing valve
AR5 Oil and water separator
AT1 Starting air receiver (air bottle)
AT2 Starting air receiver (air bottle)
PI Pressure indicator
PSL Pressure switch low, only for main engine
PT Pressure transmitter

14. Combustion air system

General:

To obtain good working conditions in the engine room and to ensure trouble free operation of all equipment attention shall be paid to the engine room ventilation and the supply of combustion air.

The combustion air required and the heat radiation of all consumers/heat producers must be taken into account.

Air intake from engine room (standard):

- Fans are to be designed for a slight overpressure in the engine room.
- On system side the penetration of water, sand, dust, and exhaust gas must be avoided.
- When operating under tropical conditions the air flow must be conveyed directly to the turbocharger.
- The temperature at turbocharger filter should not fall below + 10 °C.
- In cold areas warming up of the air in the engine room must be ensured.

Air intake from outside:

- The intake air duct is to be provided with a filter. Penetration of water, sand, dust and exhaust gas must be avoided.
- Connection to the turbocharger is to be established via an expansion joint (to be supplied by the yard). For this purpose the turbocharger will be equipped with a connection socket.
- At temperatures below + 10 °C the Caterpillar Motoren/ Application Engineering must be consulted.

Radiated heat:

see technical data
To dissipate the radiated heat a slight and evenly distributed air current is to be led along the engine exhaust gas manifold starting from the turbocharger.

15. Exhaust system

Position of exhaust gas nozzle:

Standard nozzle position is 0°.

Exhaust compensator:

	Diameter DN	Length [mm]
12 M 32 C	2 x 600	450
16 M 32 C	2 x 700	520

Design of the pipe cross-section:

The pressure loss is to be minimized in order to optimize fuel consumption and thermal load of the engine.

Max. flow velocity: 50 m/s (guide value).

Max pressure loss (incl. silencer and exhaust gas boiler): 30 mbar
(lower values will reduce thermal load of the engine).

Notes regarding installation:

- Arrangement of the first expansion joint directly on the exhaust gas transition piece
- Arrangement of the first fixed point in the conduit directly after the expansion joint
- Drain opening to be provided (protection of turbocharger and engine against water)
- Each engine requires an exhaust gas pipe (one common pipe for several engines is **not permissible).**

If it should be impossible to use the standard transition piece supplied by Caterpillar Motoren, the weight of the transition piece manufactured by the shipyard must not exceed the weight of the standard transition piece. A drawing including the weight will then have to be submitted approval.

15. Exhaust system

Resistance in exhaust gas piping

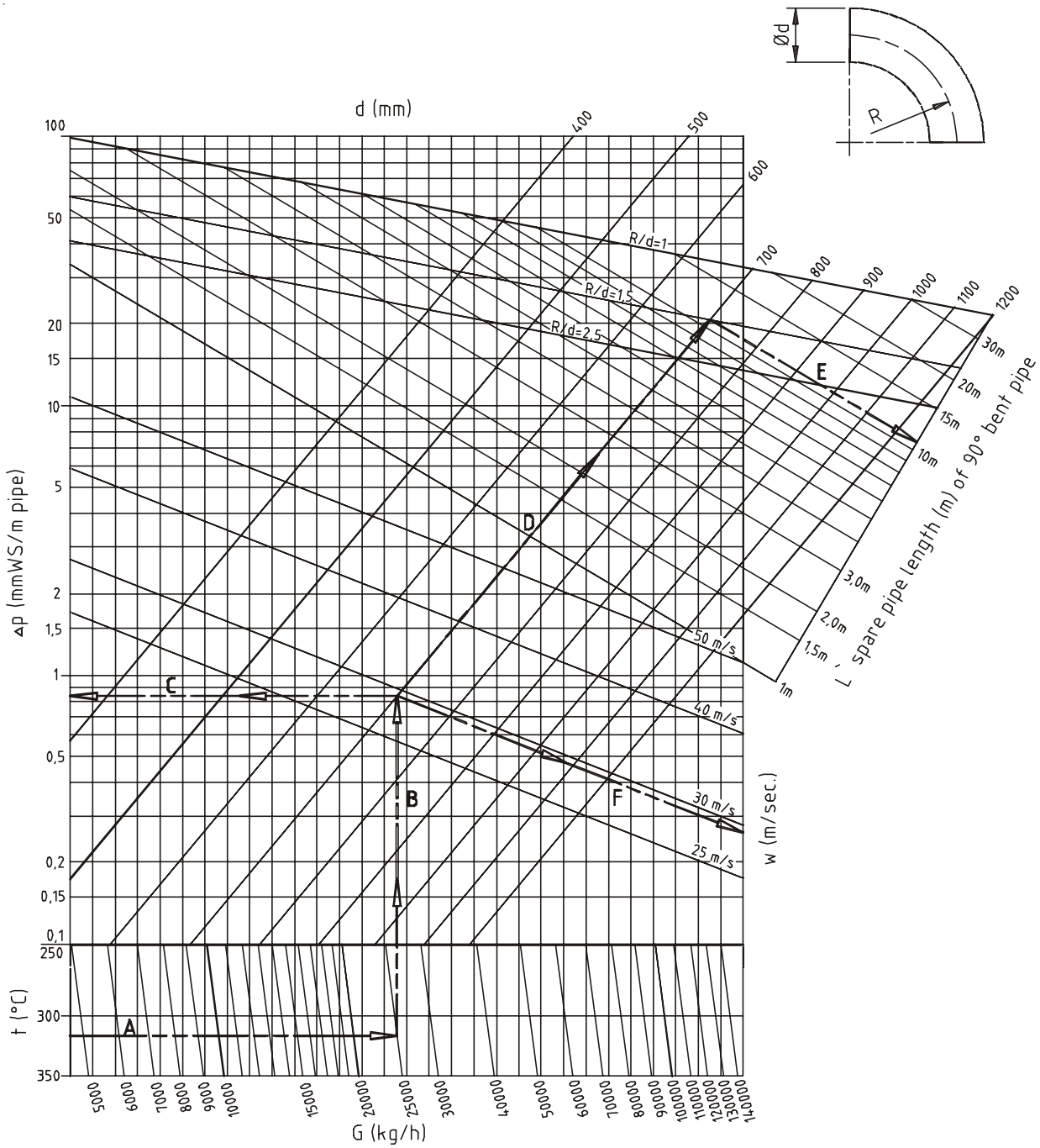

Example (based on diagram data A to E):

t = 335 °C, G = 25000 kg/h
l = 15 m straight pipelength, d = 700 mm
3 off 90° bend R/d = 1.5
1 off 45° bend R/d = 1.5
ΔPg = ?

Δp = 0.83 mm WC/m
L' = 3 · 11 m + 5.5 m
L = l + L' = 15 m + 38.5 m = 53.5 m
ΔPg = Δp · L = 0.83 mm WC/m · 53.5 m = 44.4 mm WC

t	=	Exhaust gas temperature	(°C)
G	=	Exhaust gas massflow	(kg/h)
Δp	=	Resistance/m pipe length	(mm WC/m)
d	=	Inner pipe diameter	(mm)
w	=	Gas velocity	(m/s)
l	=	Straight pipe length	(m)
L'	=	Spare pipe length of 90° bent pipe	(m)
L	=	Effective substitute pipe length	(m)
ΔPg	=	Total resistance	(mm WC)

15. Exhaust system

Exhaust sound power level Lw, not attenuated [1 x 1 m from open pipe] (to be expected)

The noise measurements are made with a probe inside the exhaust pipe.

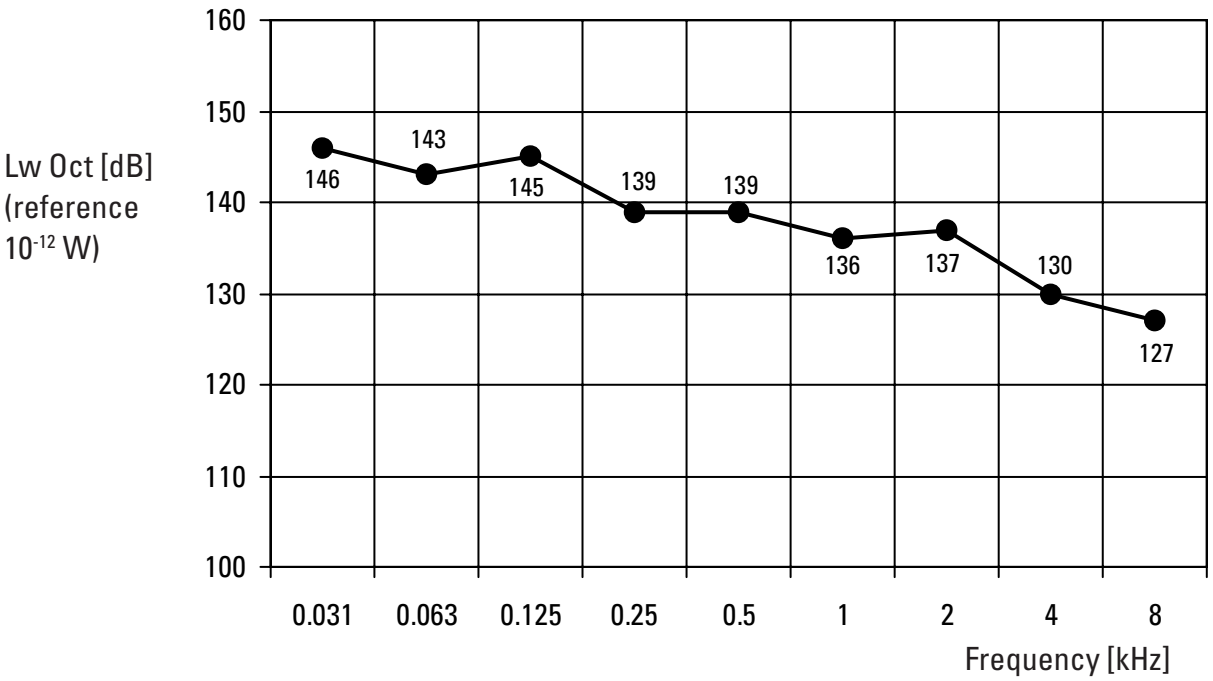

Tolerance ± 2 dB

15. Exhaust system

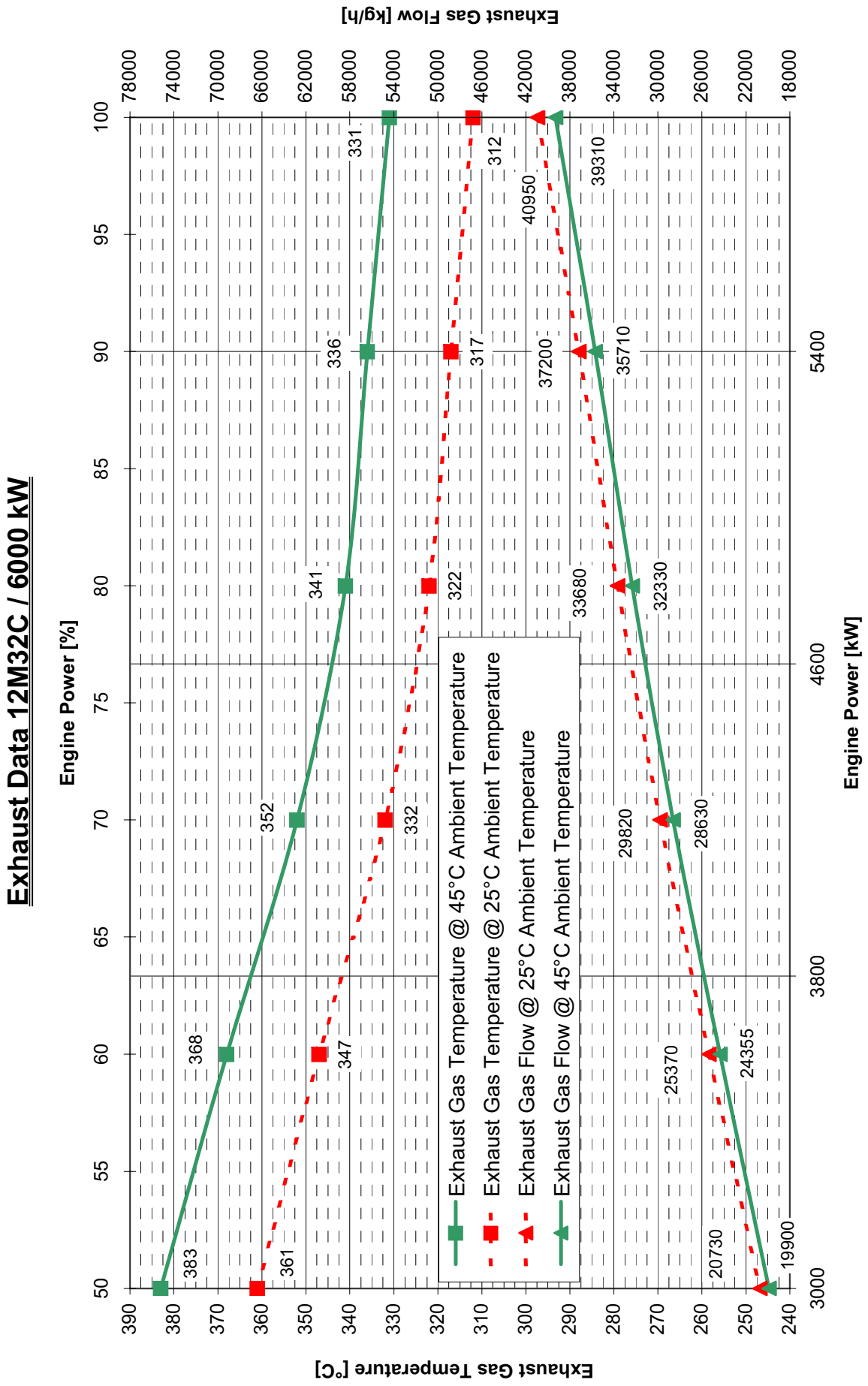

15. Exhaust system

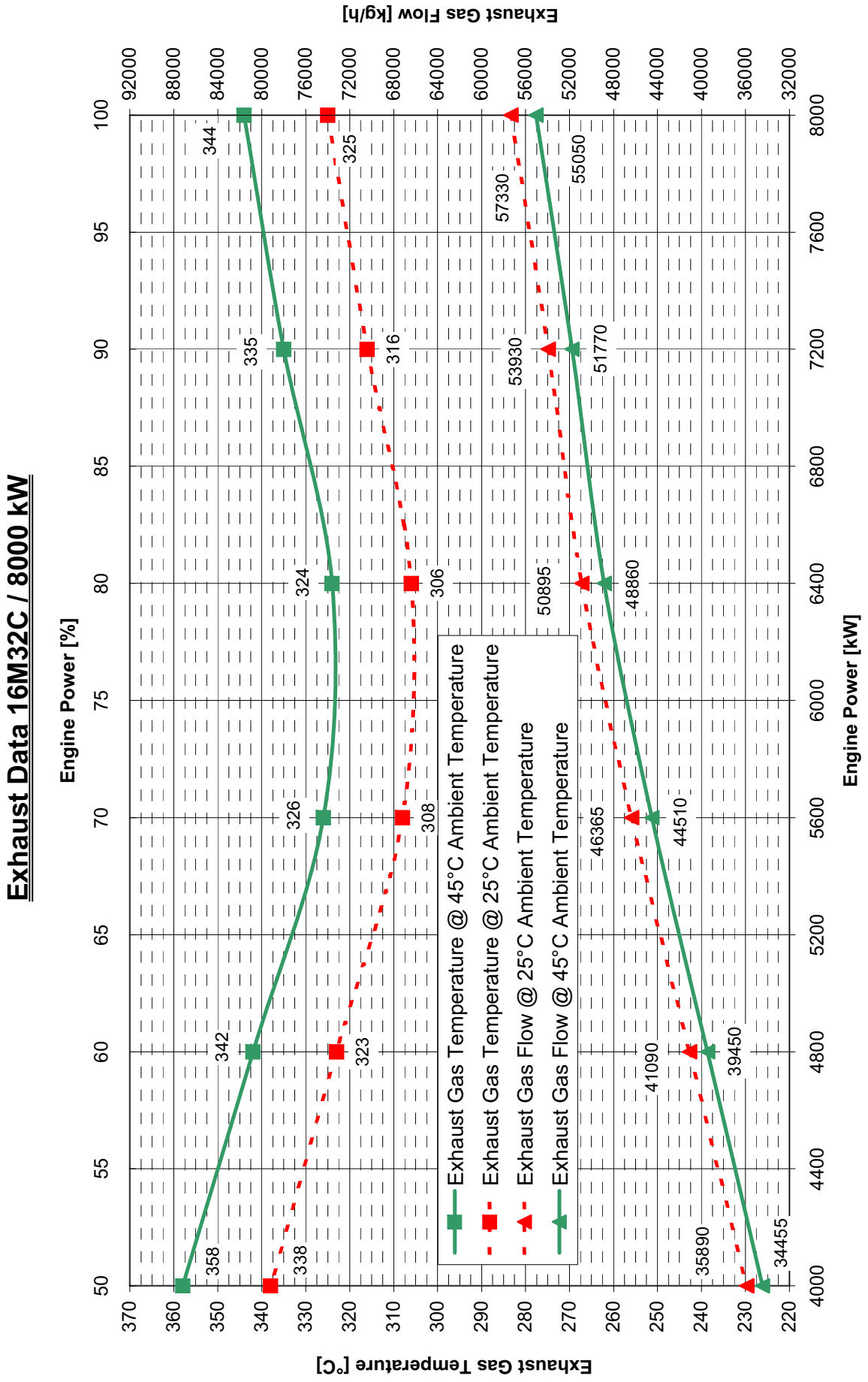

15. Exhaust system

Silencer:

Design according to the absorbtion principle with wide-band attenuation over a great frequency range and low pressure loss due to straight direction of flow. Sound absorbing filling consisting of resistant mineral wool.

Sound level 35 dB(A).
Max. permissible flow velocity 40 m/s.

Silencer with spark arrester:

Soot separation by means of a swirl device (particles are spun towards the outside and separated in the collecting chamber). Sound level reduction 35 dB(A). Max. permissible flow velocity 40 m/s.

Silencers are **to be insulated by the yard. Foundation brackets are provided as an option.**

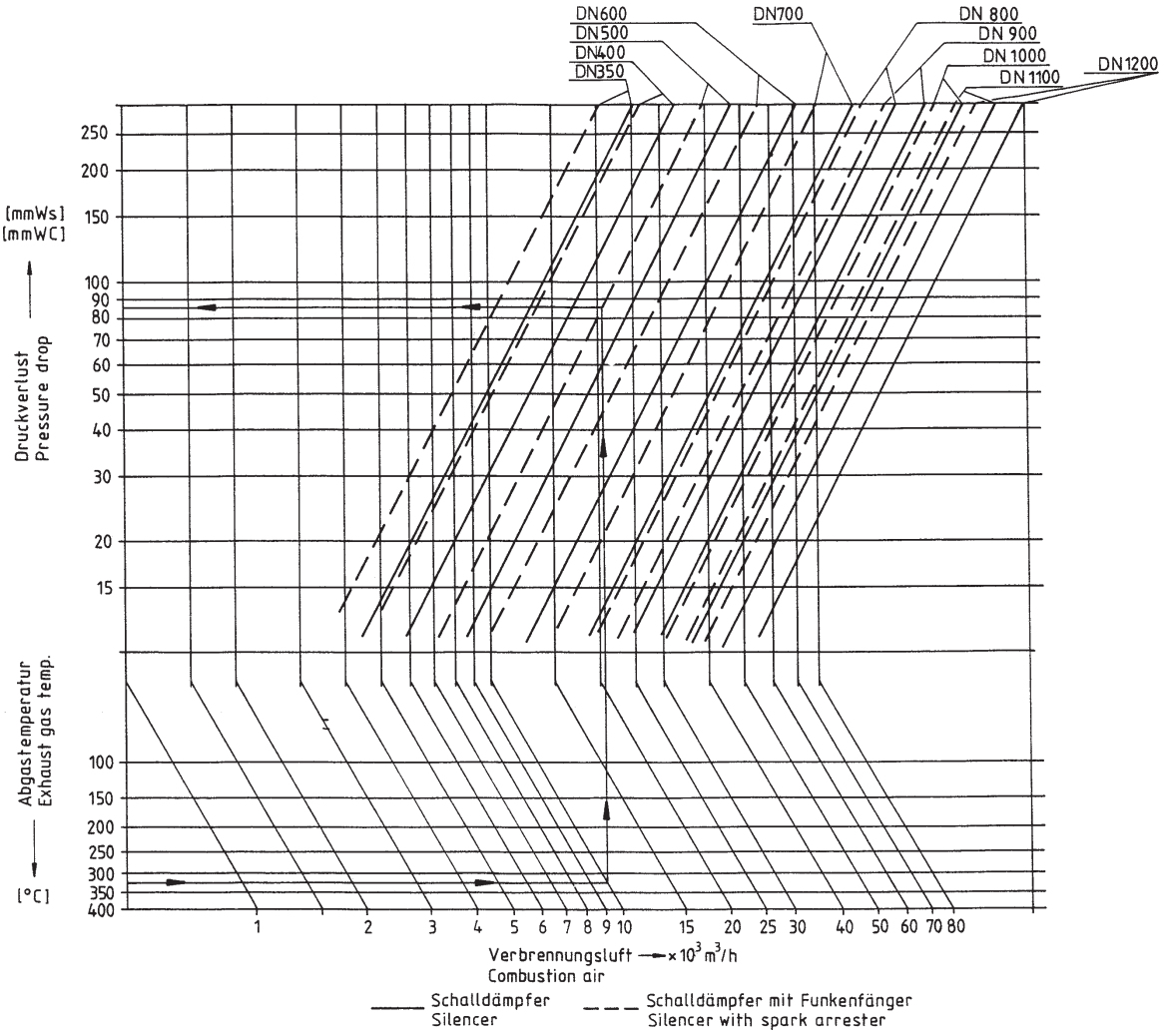

15. Exhaust system

Silencer/Spark arrestor and silencer:

Installation: vertical/horizontal
Flange according to DIN 86044
Counterflanges, screws and gaskets are included, without supports and insulation

Silencer

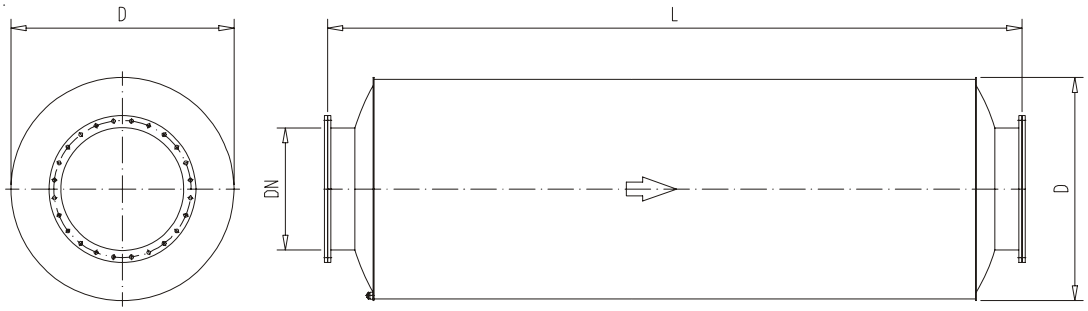

Spark arrestor and silencer

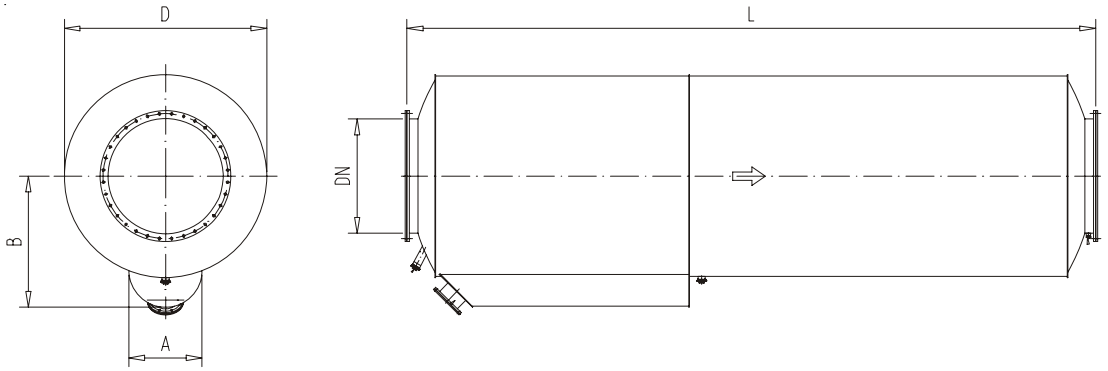

	Attenuation				35 dB (A)	
	DN	D	A	B	L	kg
12 M 32 C	900	1680	650	1100	5620	3000
16 M 32 C	1000	1780	650	1160	6120	3750

Exhaust gas boiler:

Each engine should have a separate exhaust gas boiler. Alternatively, a common boiler with separate gas sections for each engine is acceptable.

Particularly when exhaust gas boilers are installed attention must be paid not to exceed the maximum recommended back pressure.

15. Exhaust system

Cleaning the turbocharger compressor: The components for cleaning (dosing vessel, pipes, shut-off valve) are engine mounted.

Water is fed before compressor wheel via injection pipes during full load operation every 24 hours.

Cleaning the turbine blade and nozzle ring:

The cleaning is carried out with clean fresh water "wet cleaning" during low load operation at regular intervals, depending on the fuel quality, 150 hours.

Duration of the cleaning period is approx. 15 minutes (2 intervals for 12 M 32 C). Fresh water of 2 - 2.5 bar is required.

During cleaning the water drain should be checked. Therefore the shipyard has to install a funnel after connection point C36.

	Water flow [l/min]	**Injection time** [min]
12 M 32 C	25 - 30	2 x 5
16 M 32 C	20 - 25	10

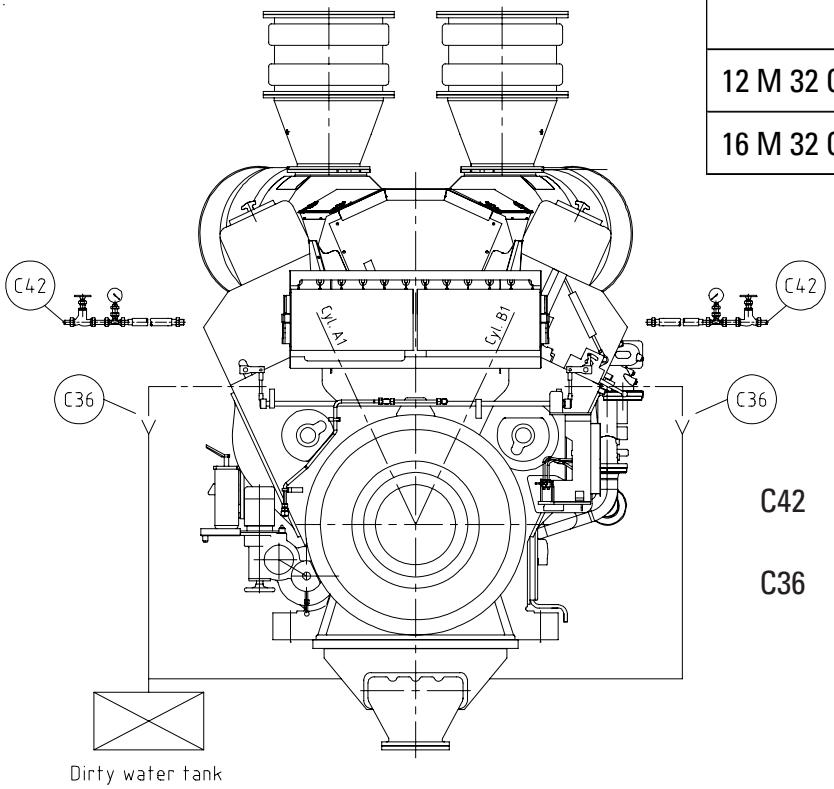

C42 Fresh water supply, DN 12
(one connection for 16 M 32 C only)
C36 Drain, DN 30
for each turbocharger

Connection of C42 with quick coupling device

16. Air borne sound power level

The noise level is measured in a test cell with a turbocharger air filter in a distance of 1 m from the engine. The measuring points are at camshaft level respective above cylinder head cover.

Noise level for 12 M 32 C engines

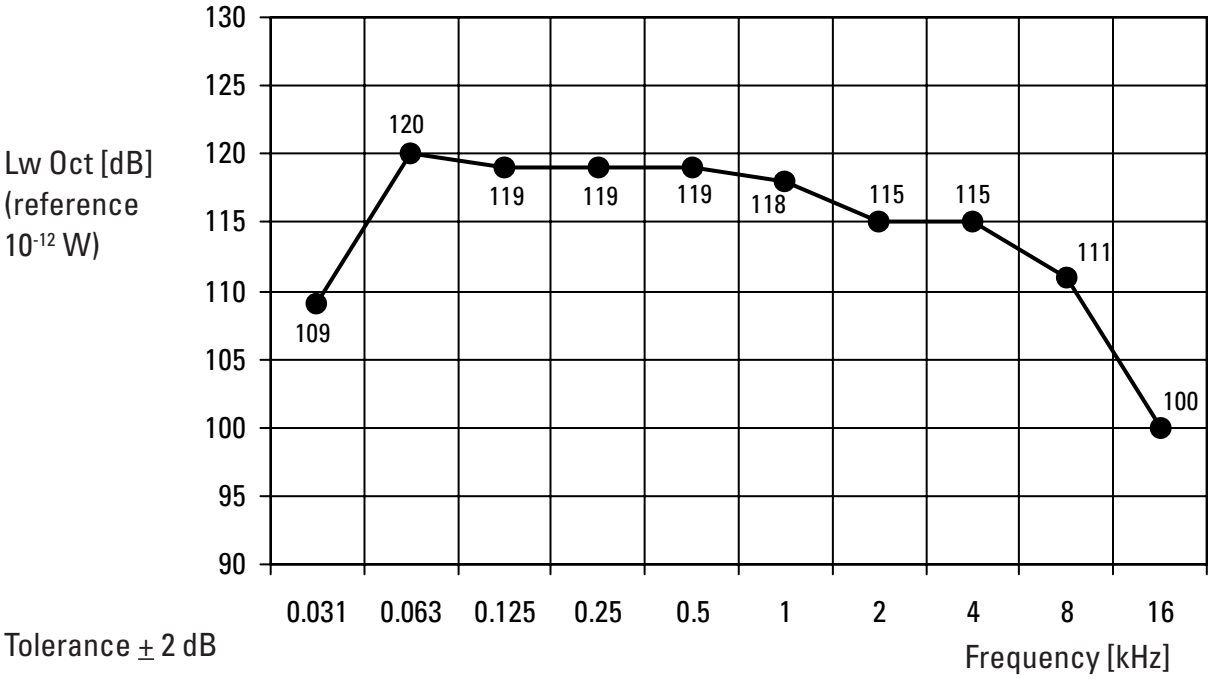

Tolerance ± 2 dB

Noise level for 16 M 32 C engines

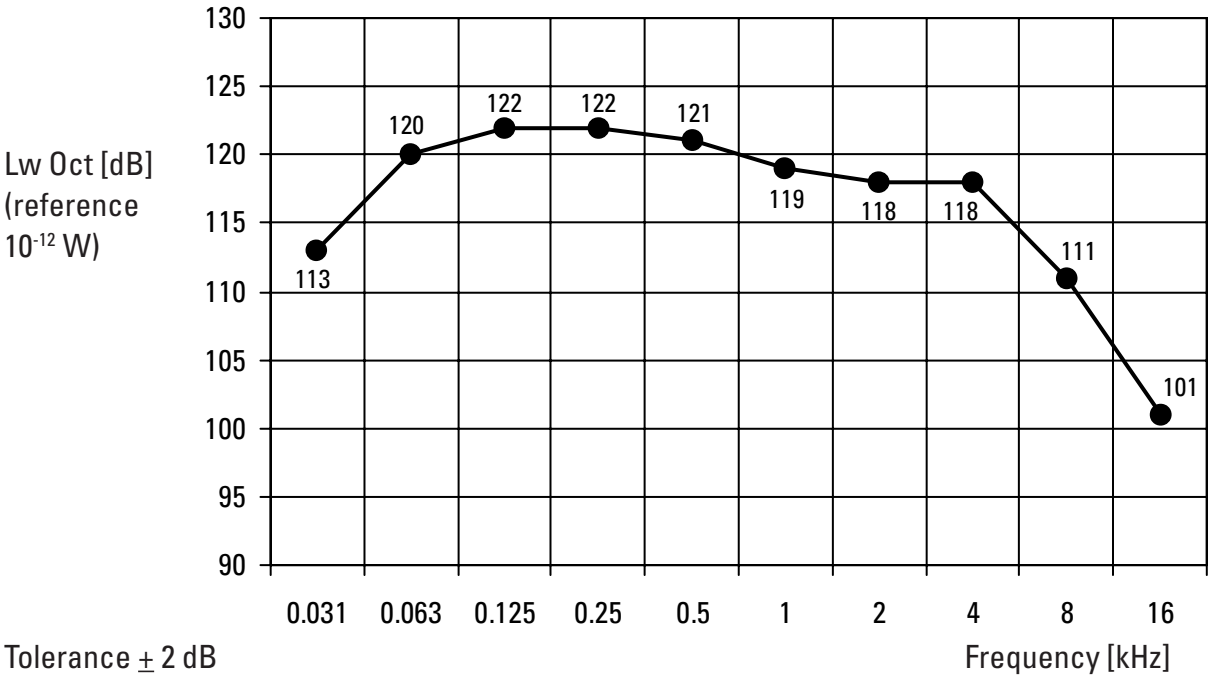

Tolerance ± 2 dB

MAK

17. Foundation

External foundation forces and frequencies:

The following information is relevant to the foundation design and the aftship structure.

The engine foundation is subjected to both static and dynamic loads.

1. Static load:

The static load results from the engine weight which is distributed approximately evenly over the engine's foundation supports and the mean working torque TN resting on the foundation via the vertical reaction forces. TN increases the weight on one side and reduces it on the other side by the same amount.

	Output [kW]	**Speed** [1/min]	**T_N** [kNm]
12 M 32 C	5760	720	76.4
12 M 32 C	6000	750	76.4
16 M 32 C	7680	720	101.9
16 M 32 C	8000	750	101.9

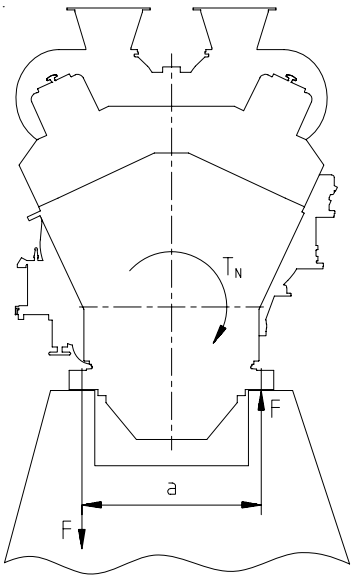

Support distance a = 1630 mm
$F = T_N / a$

2. Dynamic load:

The dynamic forces and moments are superimposed on the static forces. They result on the one hand from the firing forces causing a pulsating torque and on the other hand from the external mass forces and mass moments.

The tables indicate the dynamic forces and moments as well as the related frequencies.

17. Foundation

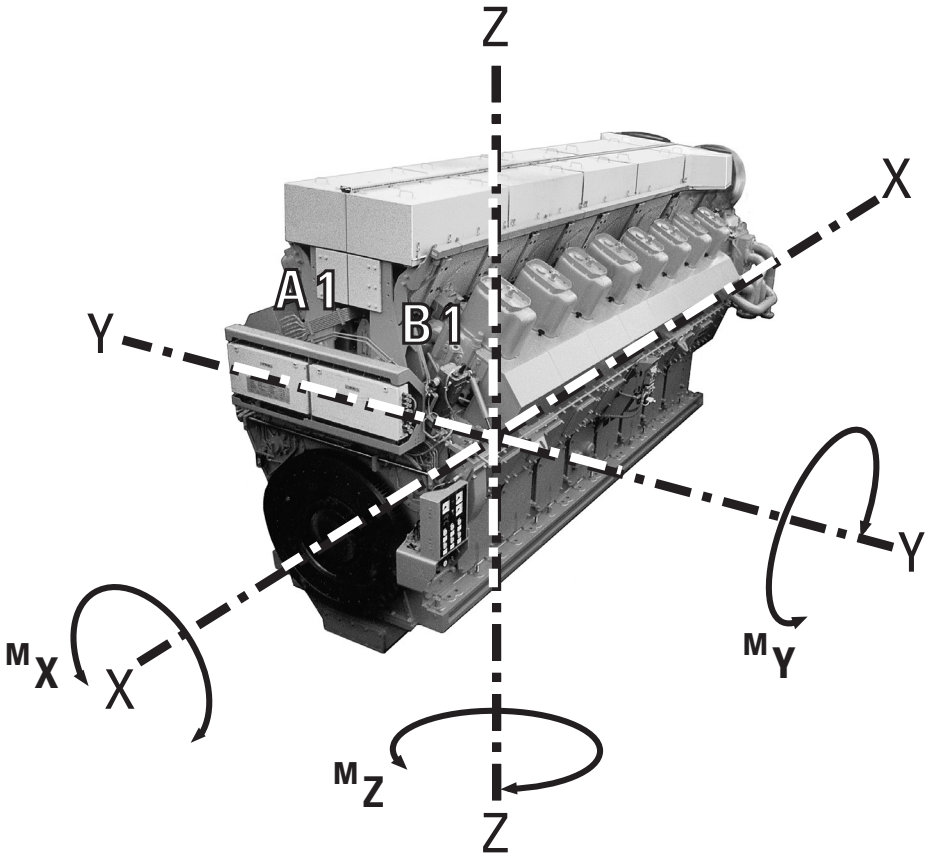

	Output [kW]	Speed [rpm]	Order-No. [-]	Frequency [Hz]	M_x [kNm]	My [kNm]	Mz [kNm]
12 M 32 C	5760	720	3 6	36 72	13.8 24.7	—	—
12 M 32 C	6000	750	3 6	37.5 75	12.6 24.7	—	—
16 M 32 C	7680	720	4 8	48 96	17.8 12.1	—	—
16 M 32 C	8000	750	4 8	50 100	17.7 12.1	—	—

All forces and moments not indicated are irrelevant or do not occur. The effect of these forces and moments on the ship's foundations depends on the type of engine mounting.

2.1 Rigid mounting:

The vertical reaction forces resulting from the torque variation Mx are the most important disturbances to which the engine foundation is subjected. As regards dynamic load, the indicated moments Mx only represent the exciting values and can only be compared among each other. The actual forces to which the foundation is subjected depend on the mounting arrangement and the rigidity of the foundation itself.

17. Foundation

In order to make sure that there are no local resonant vibrations in the ship's structure, the natural frequencies of important components and partial structures must be sufficiently far away (± 30%) from the indicated main exciting frequencies.

The dynamic foundation forces can be considerably reduced by means of resilient engine mounting.

General note:

The shipyard is solely responsible for the adequate design and quality of the foundation.

Information on foundation bolts (required pretightening torques, elongation, yield point), steel chocks, side stoppers and alignment bolts is to be gathered from the foundation plans.

Examples "for information only" for the design of the screw connections will be made available as required.

If pourable resin is used it is recommendable to employ authorized workshops of resin manufacturers approved by the classification societies for design and execution.

It has to be taken into account that the permissible surface pressure for resin is lower than for steel chocks and therefore the tightening torques for the bolts are reduced correspondingly.

17. Foundation

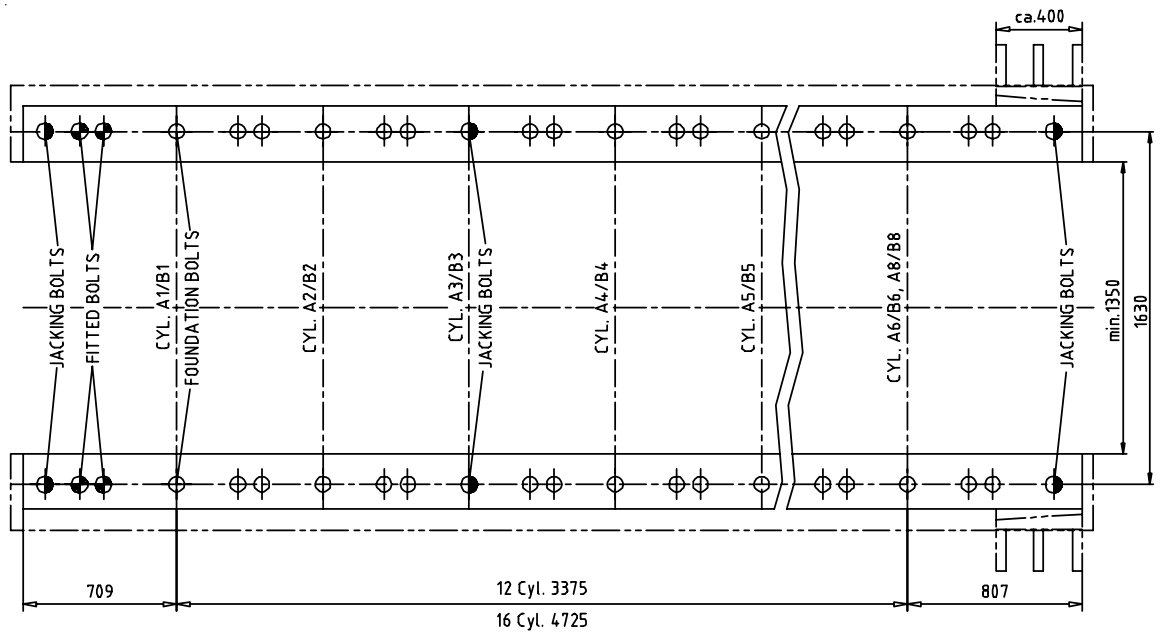

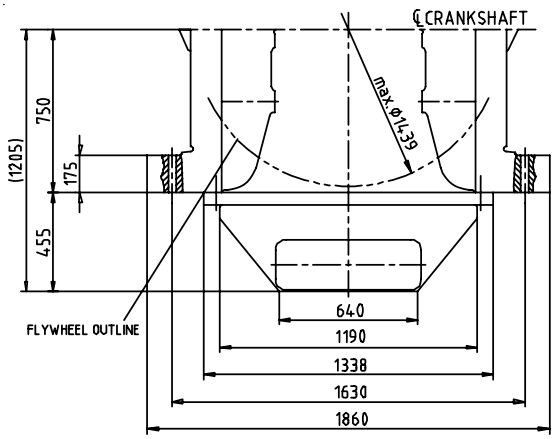

Dimensioning according to classification society and cast resin suppliers requirements.

Side Stoppers:

12/16 M 32 C: 1 Pair at end of bedplate
16 M 32 C: 1 Pair between cyl. 4 and 5

Side stopper to be with 1 wedge (see sketch). Wedge to be placed at operating temperature and secured by welding.

Number of Bolts

	Fitted bolts	Foundation bolts	Jacking bolts
12 M 32 C	4	34	6
16 M 32 C	4	44	6

Jacking Bolts

- To be protected against contact/bond with resin
- After setting of resin dismantle the jacking screws completely

To be supplied by yard: Foundation bolts, fitted bolts, nuts and tension sleeves, side stoppers, steel chocks, cast resin

The shipyard is solely responsible for adequate design and quality of the foundation.

17. Foundation

Proposal for rigid mounting

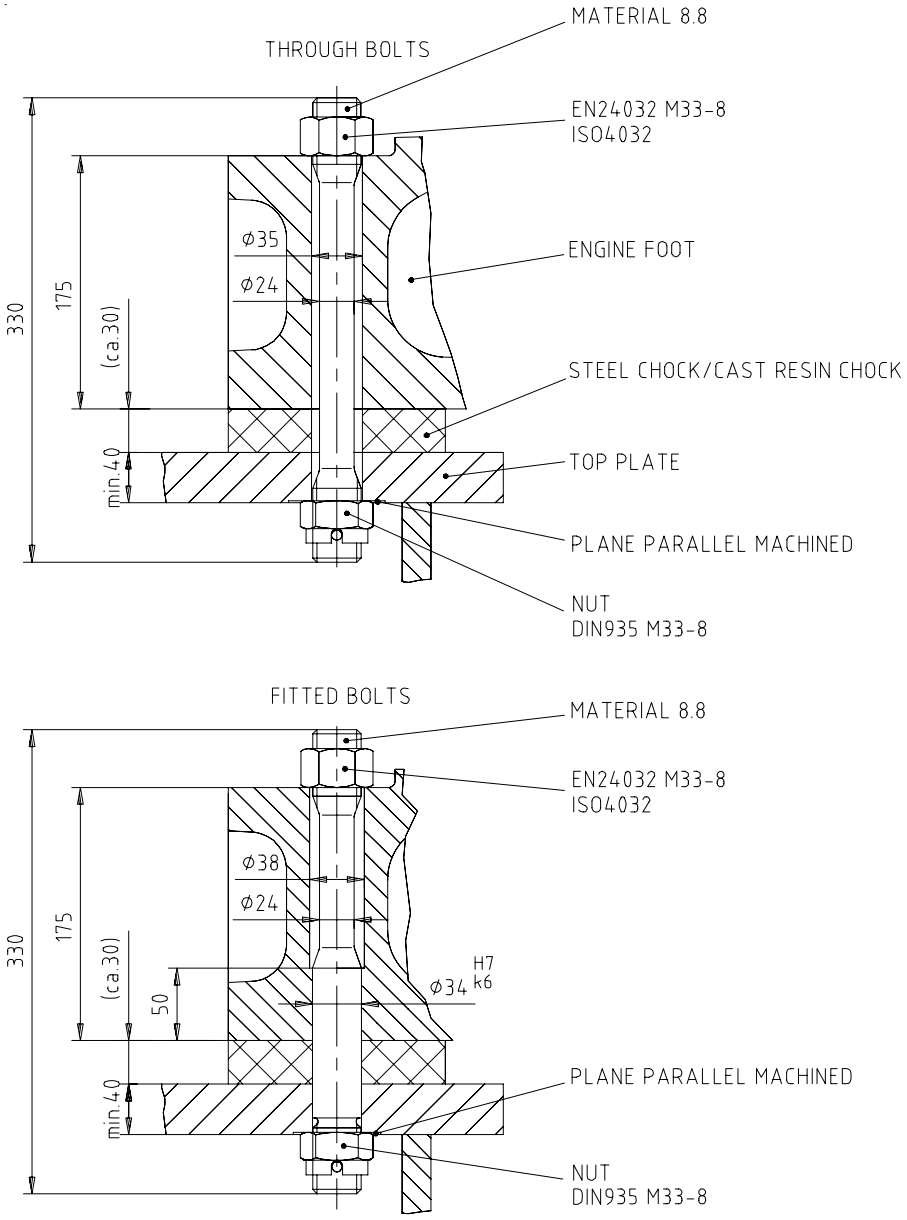

Tightening force M 33		Min. tightening torque (oil) M 33	
Cast resin / Steel		Cast resin / Steel	
Through bolts [N]	Fitted bolts [N]	Through bolts M [Nm]	Fitted bolts M [Nm]
110000	110000	650	650

Bolts and chocks are yard supply. Design responsibility is with the yard.

18. Resilient mounting

Major components:
- Conical rubber elements for active insolation of dynamic engines forces
- Dynamically balanced highly flexible coupling (also for a power take off)
- Flexible pipe connections for all media

Details are shown on binding installation drawings.

No. of major foundation components:

	12 M 32 C	16 M 32 C
Conical rubber elements	8	10

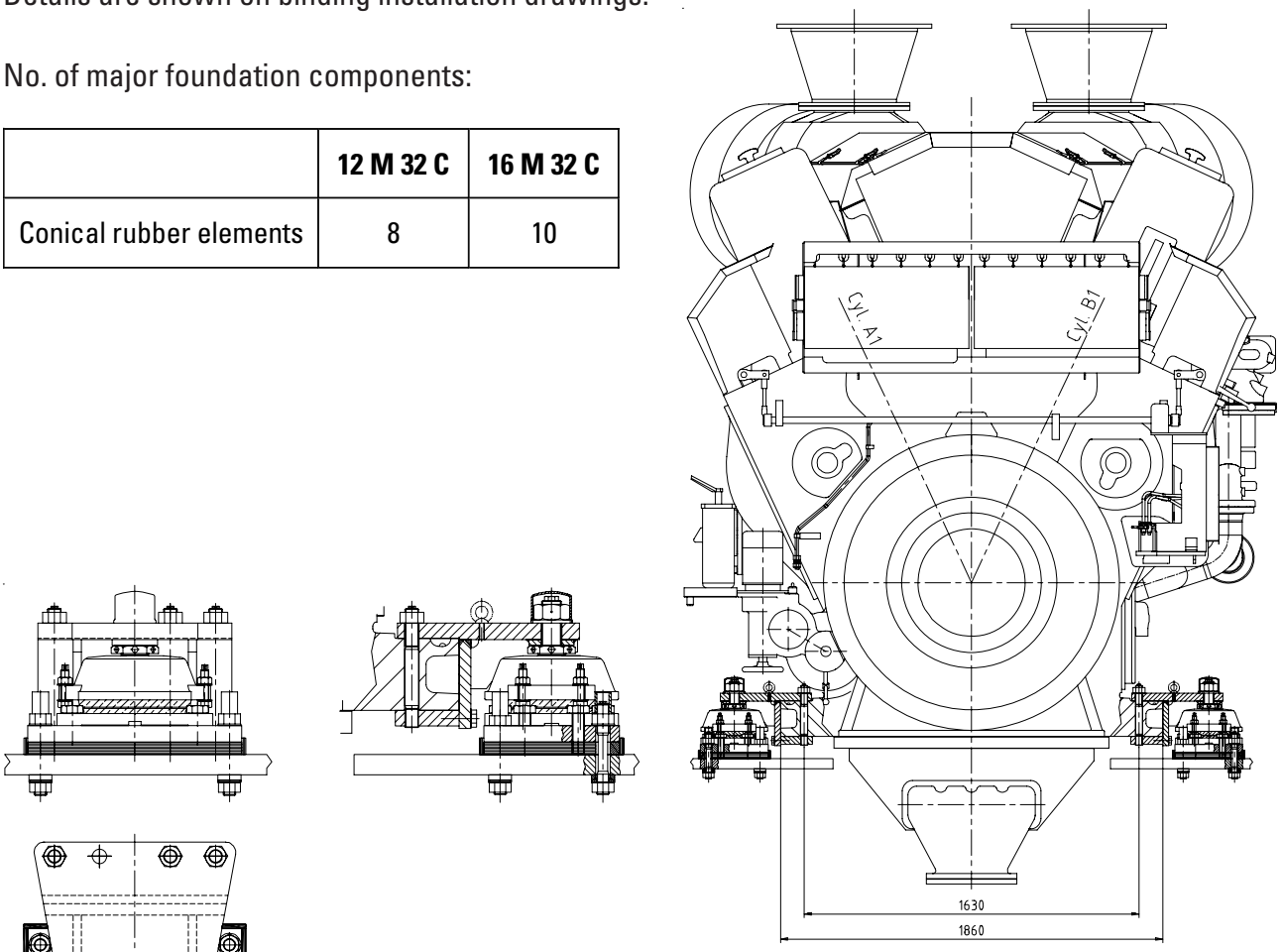

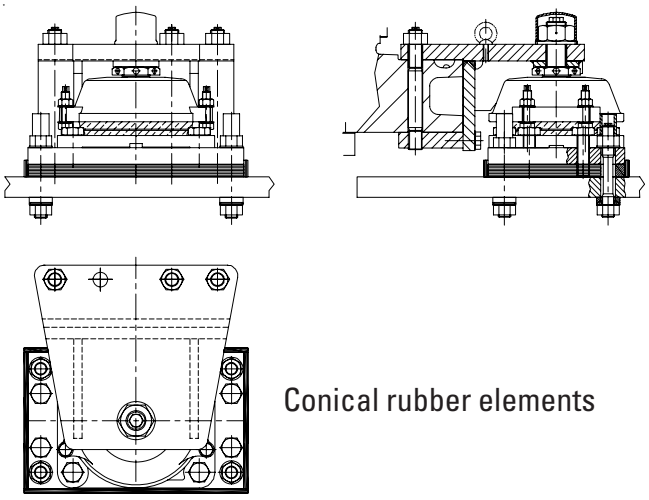

Conical rubber elements

Important note:
- The resilient mounting alone does not provide garant for a quiet ship. Other sources of noise like propeller, gearbox and aux. engines have to be considered as well.
- The flexible coupling requires dynamical balancing.
- Radial and axial restoring forces of the flexible coupling (due to seaway) may be of importance for the layout of the reduction gear.

18. Resilient mounting

Structure borne sound level L_v, expected (measured in the test cell)

Example:

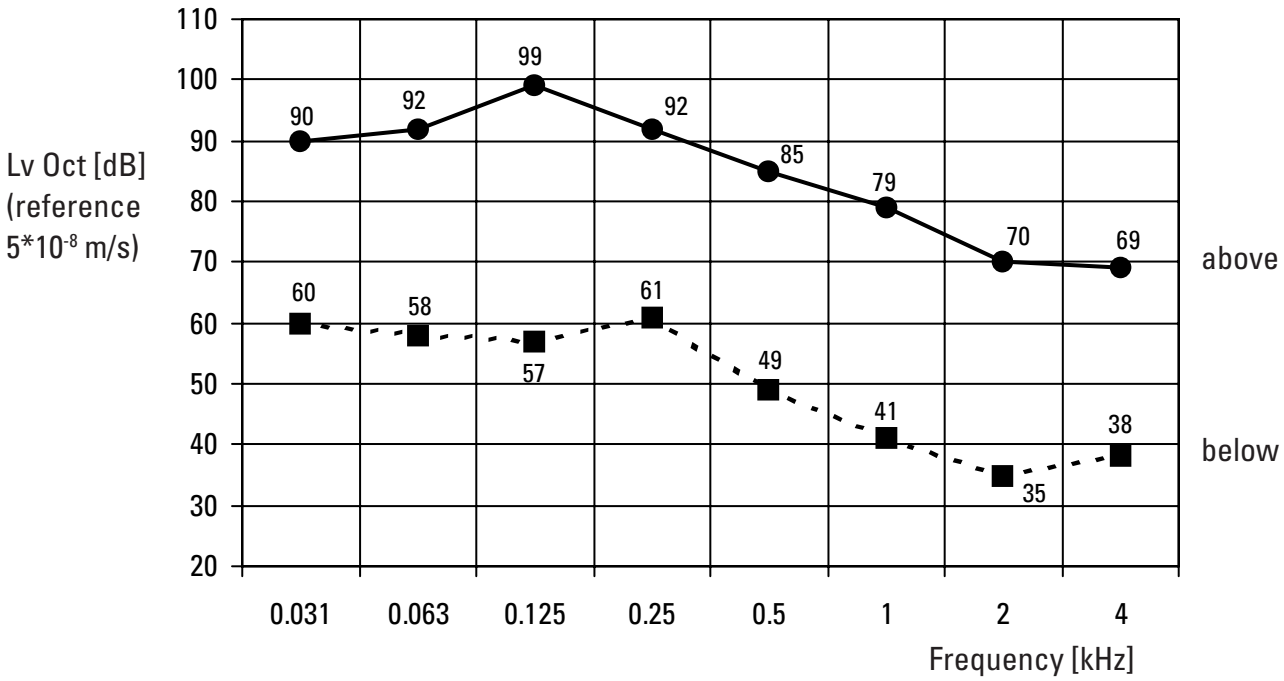

19. Power transmission

Coupling between engine and gearbox

For all types of plants the engines will be equipped with flexible flange couplings.

The **guards** for the flexible couplings must be of perforated plate or gratings to ensure an optimum heat dissipation **(yard supply).**

Mass moments of inertia

	Speed [rpm]	Engine [kgm²]	Flywheel [kgm²]	Total [kgm²]
12 M 32 C	720/750	780	442	1222
16 M 32 C		1030	440	1470

Selection of flexible couplings

The calculation of the coupling torque for main couplings is carried out acc. to the following formula.

$$T_{KN}\,[kNm] \geq \cdot \quad \frac{P_o\,[kW]}{n_o\,[min^{-1}]} \cdot 9.55$$

P_o Engine output
n_o Engine speed
T_{KN} Nominal torque of the coupling in the catalog

For installations with a gearbox PTO it is recommended to oversize the PTO coupling by the factor 2 in order to have sufficient safety margin in the event of misfiring.

19. Power transmission

Fly wheel and flexible coupling

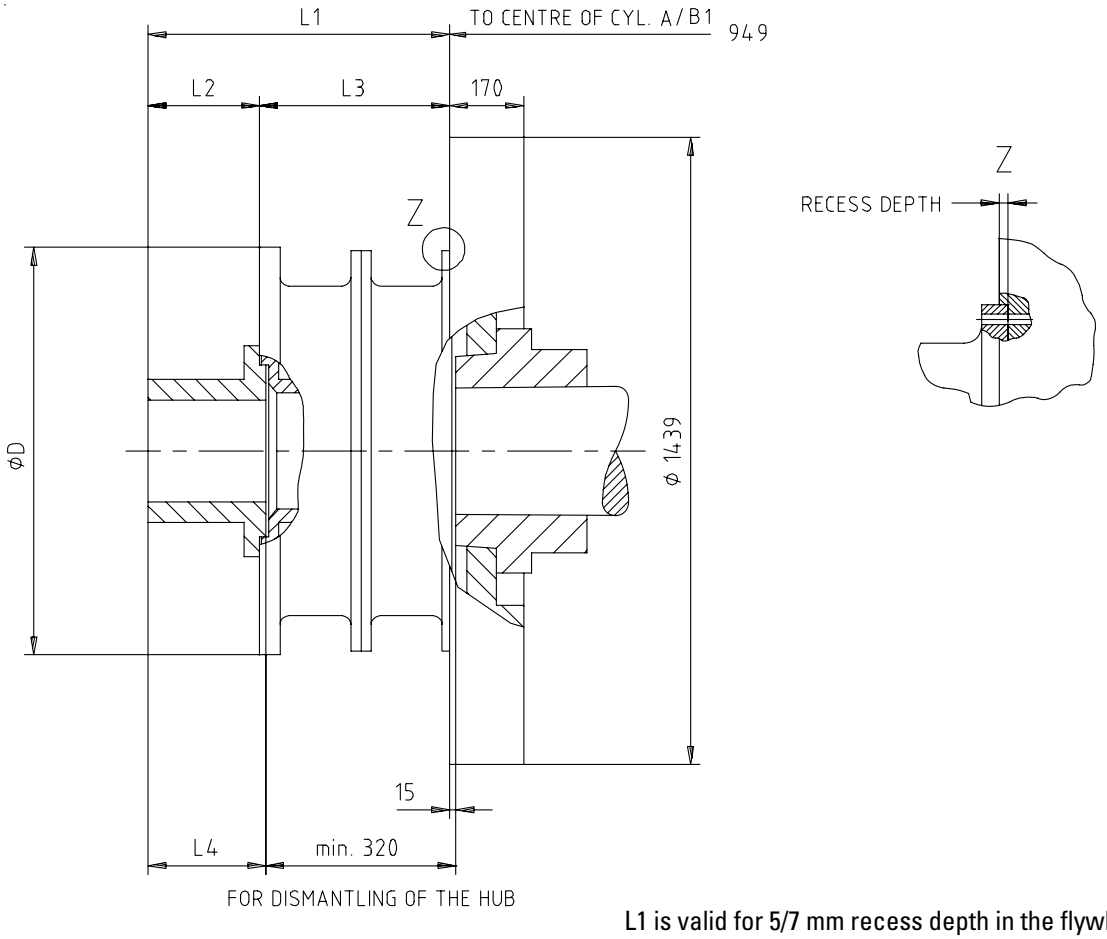

L1 is valid for 5/7 mm recess depth in the flywheel

	Power	Speed	Nominal torque of coupling	Make Vulkan										
				BR 2200 [1] / BR 2201 [2]										
				Type	D	L1 [1]	L2 [2]	L2	L3 [1]	L3 [2]	L4 [3]	Recess depth	Weight [kg]	
	[kW]	[rpm]	[kNm]		[mm]	[mm]	[mm]	[mm]	[mm]	[mm]	[mm]	Z	1)	2)
12 M 32 C	5760 6000	720 750	90	G322YR	995	695	695	273,5	421,5	421,5	300	5	854	857
16 M 32 C	7680 8000	720 750	125	G382WR	1240	876	876	353	523	523	385	7	1564	1605

Space for OD-Box to be considered!

1) without torsional limit device
2) with torsional limit device
3) length of hub

19. Power transmission

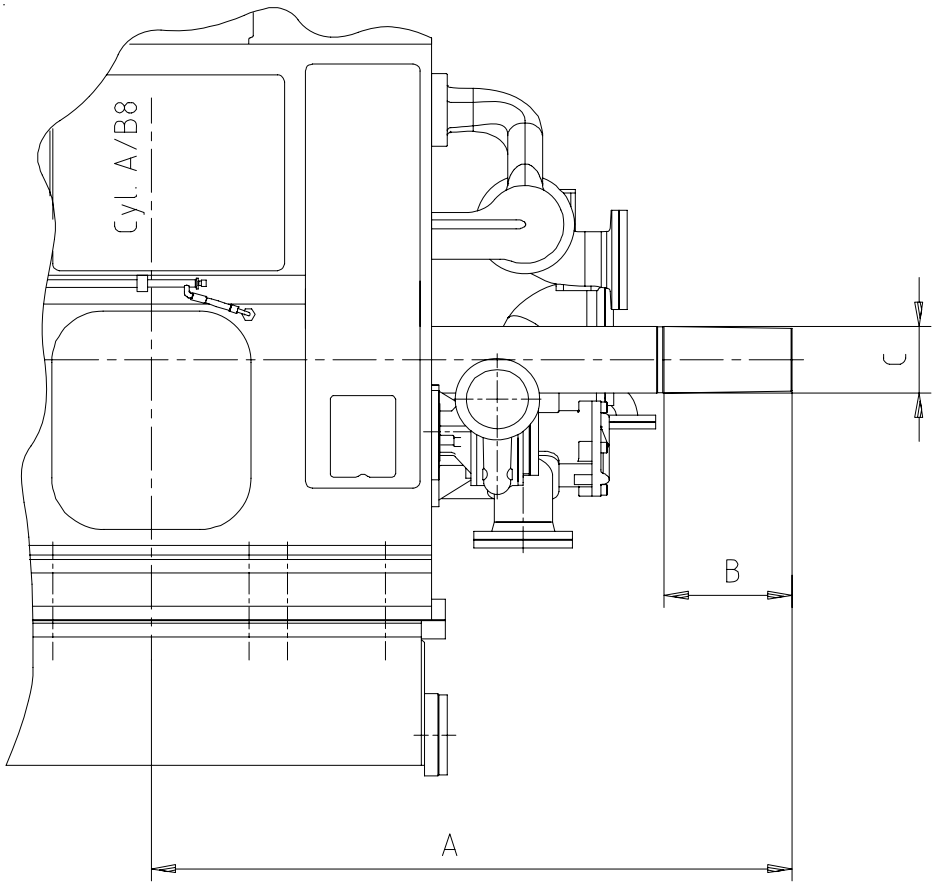

Power take-off from the free end

The Power output is limited to:

	Power	A [mm]	B [mm]	C [mm]
12/16 M 32 C	1000 kW	1721	230	151
12 M 32 C	5600 kW	1847	368	193
16 M 32 C	4320 kW	1847	368	193

The connection requires a highly flexible coupling, type Rato (if supplied by Caterpillar Motoren).

A combination (highly flexible coupling/clutch) will **not** supplied by Caterpillar Motoren. The weight force of the clutch cannot be absorbed by the engine and must be borne by the succeeding machine.

The coupling hub is to be adapted to suit the PTO shaft journal.

The definite coupling type is subject to confirmation by the torsional vibration calculation.

MAK

20. Data for torsional vibration calculation

Details to be submitted for the torsional vibration calculation

A torsional vibration calculation is made for each installation. For this purpose exact data of all components are required. See table below:

1. Main propulsion

Clutch existing ?	yes ☐	no ☐	
Moments of Inertia:	Engaged	kgm²	Disengaged: ..... kgm²
Flexible Coupling:	Make	Type:	Size
Gearbox:	Make	Type:	Gear ratio .....

Moments of Inertia and dyn. torsional rigidity (Mass elastic system)

Shaft drawings with all dimensions

CPP	D = ... mm		Blade No. .....
Moments of Inertia:	in air	kgm² / in water = ...	kgm²

Exciting moment in percent of nominal moment = ... %

Operation mode CPP:	const. speed ☐	Combinator: ☐

Speed range from: ..... – rpm

Normal speed range: CPP = 0.6 Nominal speed

---

2. PTO from gearbox: yes ☐ no ☐

If yes, we need the following information:

Clutch existing?	yes ☐	no ☐		
Moments of Inertia:	Engaged:	kgm²	Disengaged: ..... kgm²	
Flexible coupling:	Make:	type	Size	
Gearbox:	.....	Make:	type	Gear ratio: .....

Moments of Inertia and dyn. torsional rigidity (Mass diagram)

Kind of PTO driven machine:	.....	Rated output ..... kW
Power characteristics, operation speed range	..... rpm	

---

3. PTO from free shaft end: yes ☐ no ☐

If yes, we need the following information:

Clutch existing?	yes ☐	no ☐		
Moments of Inertia:	Engaged:	kgm²	Disengaged: ..... kgm²	
Flexible coupling:	Make	type	Size	
Gearbox:	.....	Make	type	Gear ratio .....

Moments of Inertia and dyn. torsional rigidity (Mass diagram)

Kind of PTO driven machine:	.....	Rated output ..... kW
Power characteristics, operating speed range	..... rpm	

---

4. Explanation:

Moments of Inertia and dyn. torsional rigidity in absolut dimensions, i. e. not reduced.

21. Control and monitoring system

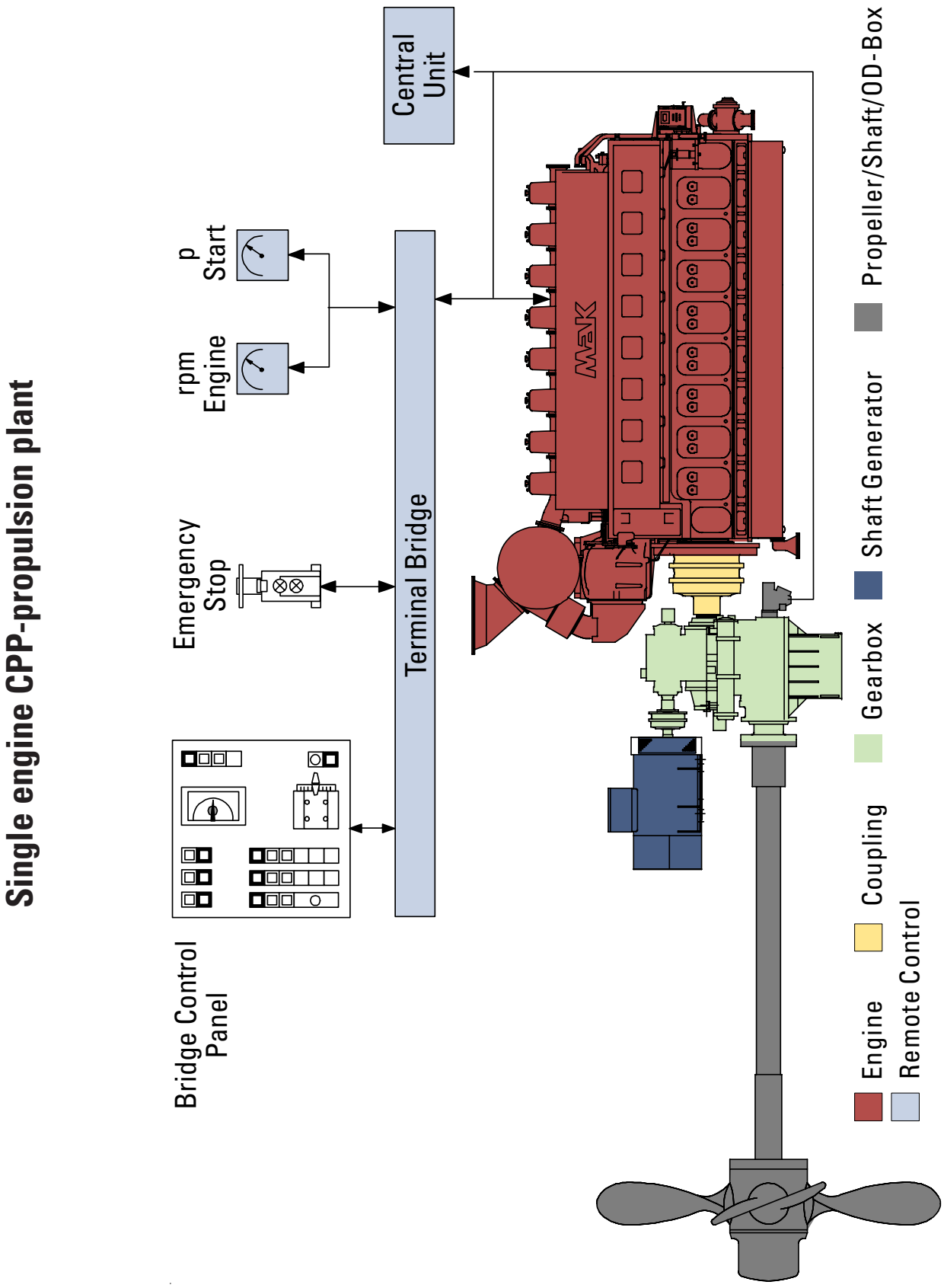

21. Control and monitoring system

Engine control panel

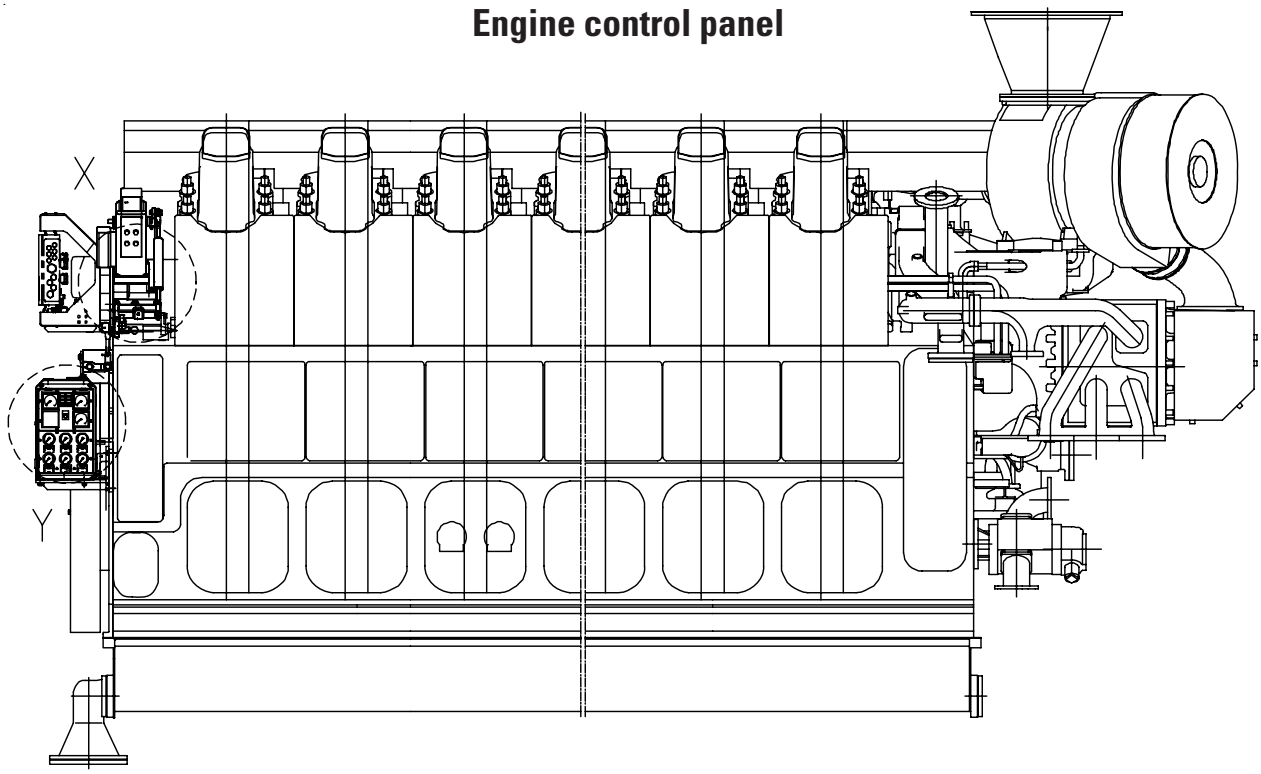

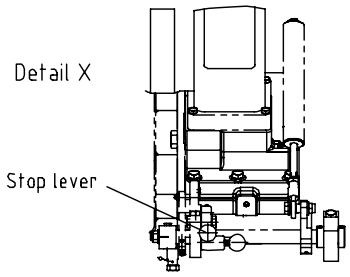

Detail X,Y : Equipment for local engine control

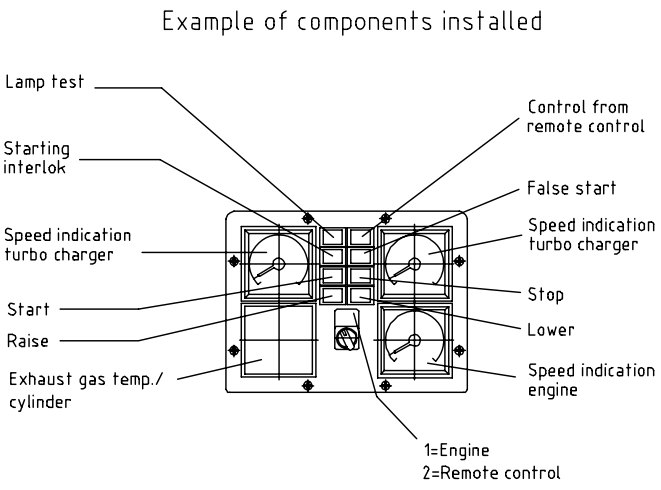

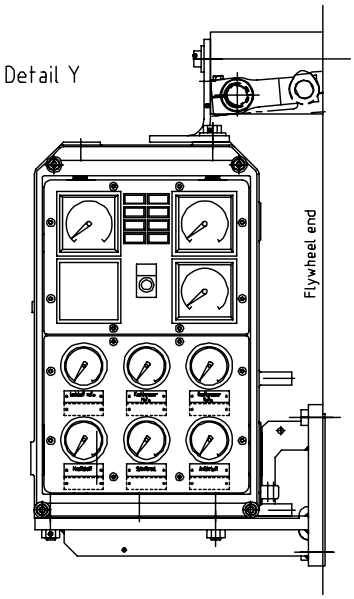

21. Control and monitoring system

Remote control for single engine plant with CP propeller

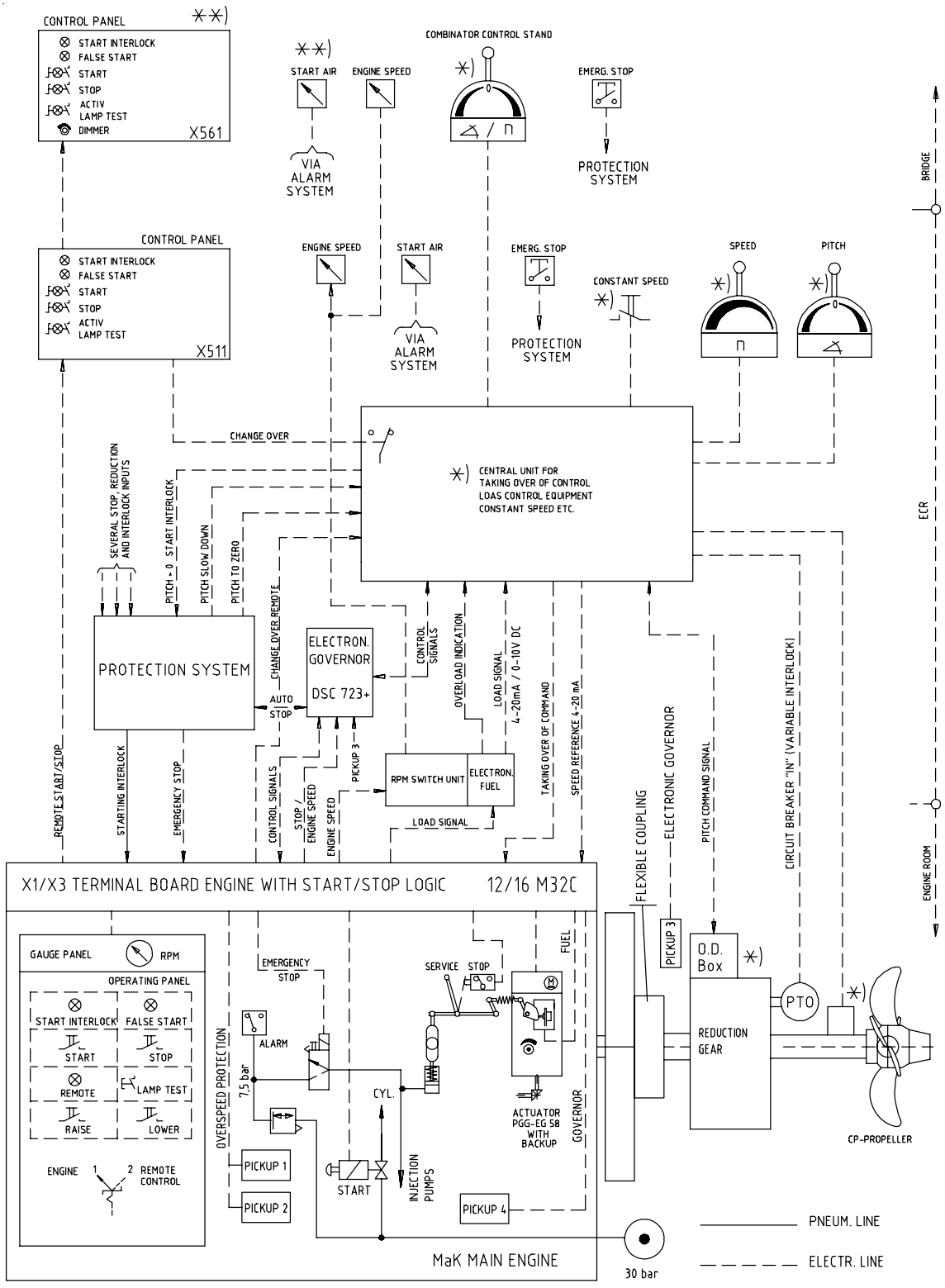

NOTE: VOLTAGE SUPPLY (18-32 V DC ,RIPPLE MAX. 5%) NEEDED FOR CONTROL AND MONITORING BUT NOT DELIVERED BY Cat.

✳) NOT DELIVERED BY CAT

✳✳) ONLY FOR NSI

21. Control and monitoring system

Remote control for twin engine plant with one CP propeller

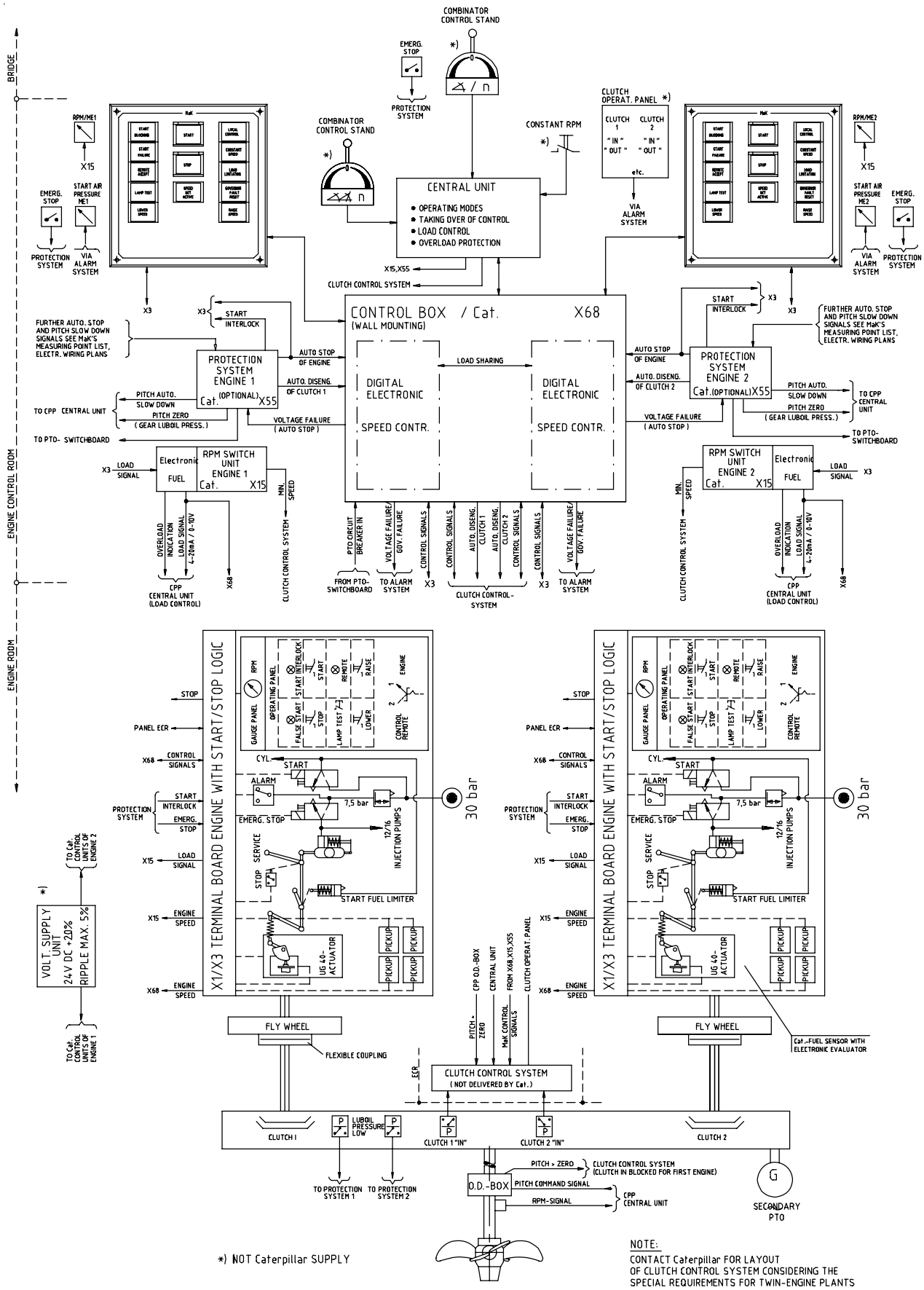

21. Control and monitoring system

Speed control

The engine is equipped with an actuator with mech. back-up. The electronic governor make Woodward is installed in a separate control box.

The governor comprises the following functions:

- Speed setting range to be entered via parameters
- Adjustable acceleration and deceleration times
- Starting fuel limiter
- Input for stop (not emergency stop)
- 18 - 32 V DC voltage supply
- Alarm output
- Droop operation (primary shaft generator)
- Isochronous load distribution by master/slave princip for twin engine propulsion plants via double-reduction gear
- Option: mechanical back-up for twin engine plant

Twin engine plant with one CPP **Single engine plant with CPP**

Control box electronic governor
with mounting frame and shock absorber

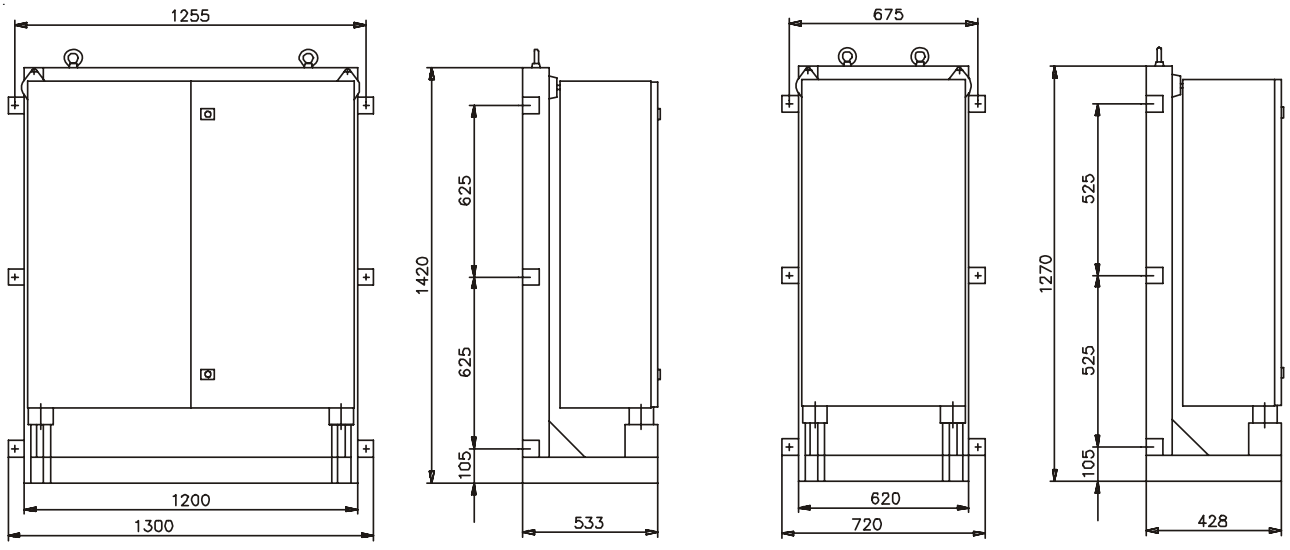

21. Control and monitoring system

Engine monitoring

Example 16 VM32C
Terminal boards same for 12 VM32C

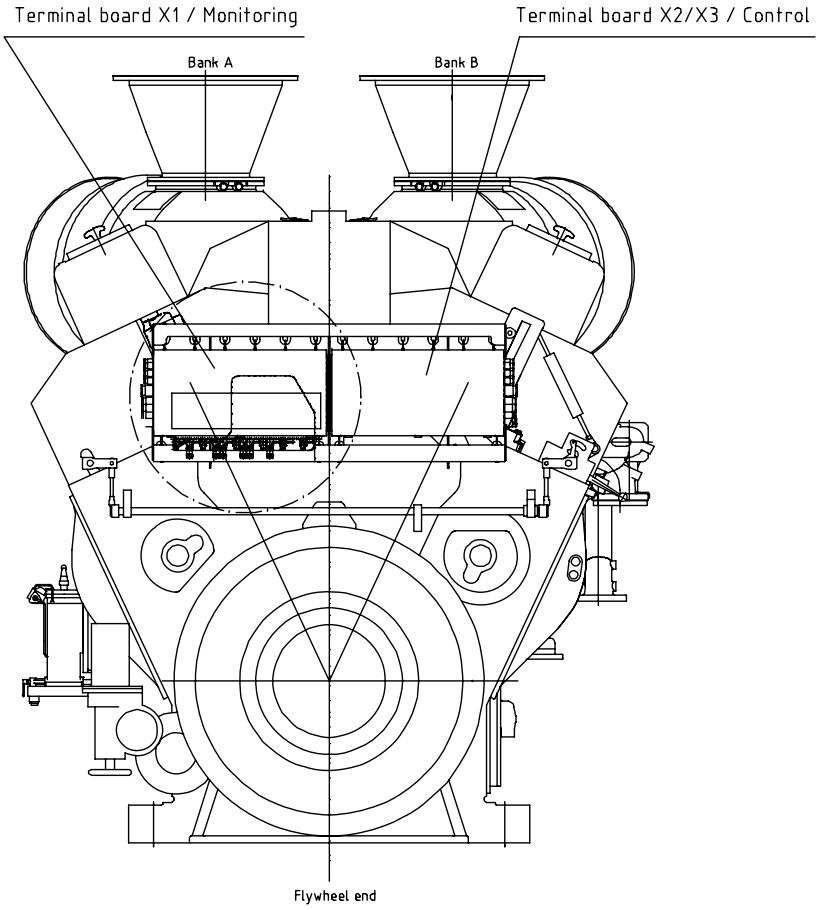

Detail X : Arrangement of terminal board box X1 / pressure switch

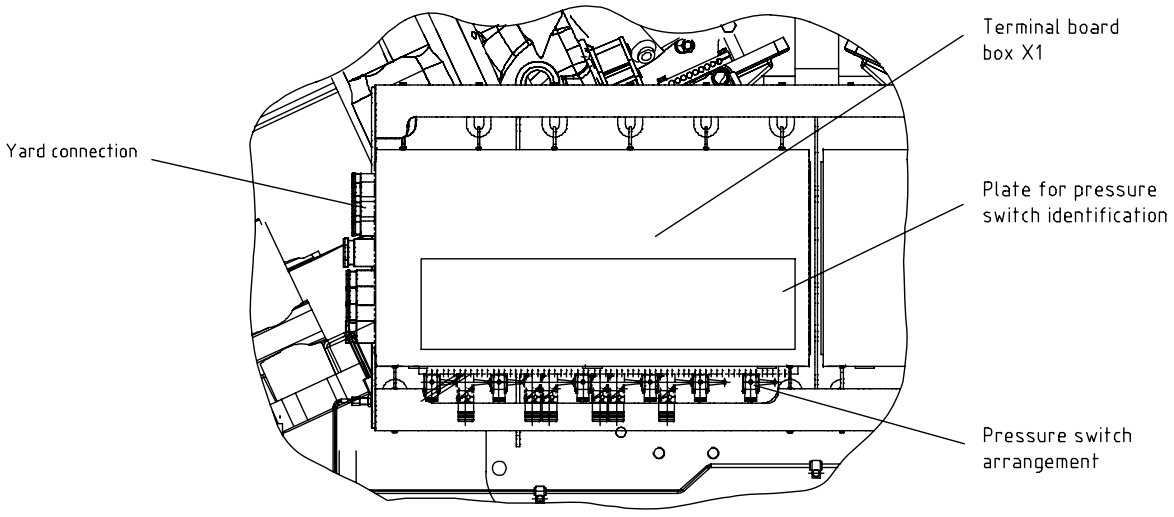

MAK

21. Control and monitoring system

List of measuring point: Main engine VM 32 C all classes

Measur.-point	Monitoring point	Abbrev.	Action	Sensoric			Remarks
					Separate parts		
				MDO/HFO	MDO/HFO	HFO	
1102	Luboil pressure/350 rpm	PAL	OA	A			1 sensor f. 1102+1105
1103	Luboil pressure/350 rpm	PALL	OA AD	B			
1104	Luboil pressure	PAL	OA	B			Starting stand-by pump from pump control
1105	Luboil pressure	PAL	OA	A			1 sensor f. 1102+1105
1106	Luboil pressure	PALL	OA MS	B			
1111	Luboil differential pressure duplex filter	PDAH	OA		B		
1112	Luboil differential pressure autom. filter	PDAH	OA		B		
1202	Lubricating oil temperature engine inlet	TAH	OA	A			
1203	Lubricating oil temperature engine inlet	TAHH	OA AD	B			
1251	Smoke concentration crankcase	QAH	OA	B#			# 1 device f. 1251+1253
1253	Smoke concentration crankcase	QAH	OA MS	B#			# 1 device f. 1251+1253
2101	FW pressure high temp. circuit engine inlet	PAL	OA	B			Starting stand-by pump from pump control
2102	FW pressure high temp. circuit engine inlet	PAL	OA	A			
2103	FW pressure high temp. circuit engine inlet	PALL	OA MS	B			
2111	FW pressure low temp. circuit cooler inlet	PAL	OA		B		Starting stand-by pump from pump control
2112	Fresh water pressure low temp. circuit cooler inlet	PAL	OA	A			
2201	Fresh water temp. high temp. circuit engine inlet	TI		A			
2211	Fresh water temp. high temp. circuit engine outlet	TAH	OA	A			
2212	Fresh water temp. high temp. circuit engine outlet	TAHH	OA AD	B			
2229	Fresh water temp. low temp. circuit	TI		A			
2321	Oil ingress in fresh water cooler outlet	QAH	OA		B		Option

MAK

21. Control and monitoring system

List of measuring point: Main engine VM 32 C all classes

Measur.-point	Monitoring point	Abbrev.	Action	Sensoric			Remarks
					Separate parts		
				MDO/HFO	MDO/HFO	HFO	
5101	Fuel oil pressure engine inlet	PAL	OA	B			Not provided with HFO Starting stand-by pump from pump control
5102	Fuel oil pressure engine inlet	PAL	OA	A			
5105	Fuel oil pressure/ pressure pump	PAL	OA			B *	Starting stand-by pump from pump control
5111	Fuel oil differential pressure duplex filter	PDAH	OA	B			
5112	Fuel oil differential pressure autom. filter	PDAH	OA			B *	
5115	Fuel oil differential pressure circulating pump	PDAL	OA			B *	Starting stand-by pump from pump control
5116	Fuel oil differential pressure circulating pump	PDAL	OA			B *	
5201	Fuel oil temperature engine inlet	TAL	OA	A#			# 1 Sensor f. 5201+5202 not used with HFO
5202	Fuel oil temperature engine inlet	TAH	OA	A#			# 1 Sensor f. 5201+5202 not used with HFO
5206	Fuel oil temperature on viscosimeter	TI				A	
5251	Fuel oil viscosity engine inlet	VAH	OA			#	# 1 Sensor f. 5251, 5252 + 5253
5252	Fuel oil viscosity engine inlet	VAL	OA			#	# 1 Sensor f. 5251, 5252 + 5253
5253	Fuel oil viscosity engine inlet	V				A#	# 1 Sensor f. 5251, 5252 + 5253
5301	Level of leak fuel	LAH	OA	B			
5333	Fuel level mixing tank	LAL	OA			B *	
6101	Starting air pressure engine inlet	PAL	OA	A			
6105	Shut down air pressure on engine	PAL	OA	B			
6106	Starting air after main starting valve	P		B			Activating of alarm system
6181	Air intake pressure, absolute engine room	PI		A			
7109	Charge air pressur engine inlet	PI		A			
7201	Charge air temperature engine inlet	TAH	OA	A			

* located in the fuel pressure system

21. Control and monitoring system

List of measuring point: Main engine VM 32 C all classes

Measur.-point	Monitoring point	Abbrev.	Action	Sensoric			Remarks
					Separate parts		
				MDO/HFO	MDO/HFO	HFO	
7206	Air intake temperature before turbocharger	TI		A			Air intake temperature
7301	Water in charge air manifold	QAH	OA	B			
7307	Charge air differential pressure inlet/outlet charge air cooler	PDI		A			
7309 A/B	Charge air temperature inlet charge air cooler	TI		A			
8211 A/B	Exhaust gas temp. deviation from average each cylinder	TAH TAHH	OA AD	A			
8221 A/B	Exhaust temperature after turbocharger	TAH TAHH	OA AD	A			
8231 A/B	Exhaust temperature before turbocharger	TI		A			
9401	Engine speed	S			B		Alarm suppression
9402	Engine speed	S			B		Start/stop luboil stand-by pump
9403	Engine speed n < 0,7 n nom	S			B		Alarm suppression
9404	Engine overspeed	S	OA MS		B		
9409	Working hour meter/engine	S			B		
9411	Engine speed	S			B		Start/stop of luboil gear box stand-by pump from pump control
9419	Engine speed	NI			A		
9429 A/B	Speed turbocharger	NI		A			
9503	Hand lever at fuel rack in stop position			B			
9509	Injection pump/fuel rack	GI		A			
9531	Load/>=Engine limit curve speed governor	GI		B			Overload indiction (CP-propeller)
9532	Load/>=Engine limit curve speed governor	GI		A			Load control (CP-propeller)
9561	Barring gear engaged			B			Start interlock

MAK

21. Control and monitoring system

List of measuring point: Main engine VM 32 C all classes

Measur.-point	Monitoring point	Abbrev.	Action	Sensoric			Remarks
					Separate parts		
				MDO/HFO	MDO/HFO	HFO	
9601	Electronic units/terminal point X1/voltage failure		OA	B			
9611	RPM switch/voltage failure, wire break		OA		B		
9615	Failure electronic governor		OA		B		
9616	Failure electronic governor		OA MS		B		
9622	Exhaust gas temp. average equipment, voltage failure		OA		B		
9631	Crankcase oil mist detector voltage, lens/lamp		OA	B			
9671	Protection system failure		OA		B		
9717	Electrical start/stop equipment/voltage failure		OA	B			
9751	Temperature controller voltage failure		OA		B		Dependent from system
9761	Viscosity control, voltage failure		OA		B		Dependent from system
9771	Preheater freshwater, voltage failure		OA		B		Dependent from system
9775	Preheater fuel oil, voltage failure		OA		B		Dependent from system

Abkürzungen / Abbreviations

B = Binary sensor
A = Analogue sensor
OA = Visual and audible alarm
AD = Autom. speed/load reduction
MS = Autom. engine stop

GI = Position indication
LAH = Level alarm high
LAL = Level alarm low
NI = Speed indication
P = Pressure
PAL = Pressure alarm low
PALL = Pressure alarm low low
PDI = Pressure difference indication
PDAH = Pressure difference alarm high
PDAL = Pressure difference alarm low
PI = Pressure indication
QA = Measurement alarm
QAH = Measurement alarm high
S = Speed
TAH = Temperature alarm high
TAHH = Temperature alarm high high
TAL = Temperature alarm low
TI = Temperature indication
V = Viscosity
VAH = Viscosity alarm high
VAL = Viscosity alarm low

MaK

21. Control and monitoring system

Local and remote indicators

Local indicators			Remote indicators [5]									
DICARE "OFF"		Standard (fitted on engine)	Caterpillar Motoren 96 x96	Required by class. societies [6]								
				Bridge	ECR							
					GL	LRS *	ABS	BV	RINa	RMRS	NV *	CCS
X	X	1. Fuel temperature at engine inlet	⊗		X					X		X
	X	2. Differential pressure fuel filter										
X	X	3. Mean injection pump rack position	⊗									
X	X	4. Lube oil temperature at engine inlet	⊗		X		X	X	X	X		X
	X	5. Differential pressure lube oil filter					(X)	X	(X)			
X		6. Freshwater temperature at engine inlet HT										
X	X	7. Freshwater temperature at engine outlet HT	⊗		X		X	X	X	X		
X		8. Freshwater temperature after intercooler										
X		9. Differential pressure intercooler (separate)										
X		10. Differential pressure intake air filter (turbocharger)										
X	X	11. Charge air temperature before engine	⊗		X		(X)					(X)
		Gauge board (fitted on engine)										
	X	1. Fuel pressure	⊗		X		X	X	X	X		X
X	X	2. Lube oil pressure	⊗		X		X	X	X	X		X
X	X	3. Freshwater pressure HT	⊗		X		X	X	X	X		X
	X	4. Freshwater pressure LT	⊗									
	X	5. Start air pressure	⊗	X[4]	X	X	X	X	X	X	X	X
X	X	6. Charge air pressure after intercooler	⊗		X					X		
	X	7. Shutdown air										
X	X	8. Engine speed	⊗[1]	X	X	X	X	X	X		X	X
X	X	9. Turbocharger speed	⊗									
		10. Temperature indication										
X	X	10.1 Charge air temperature before intercooler			X							
X	X	10.2 Exhaust gas temperature after cylinder	⊗[2]		X[3]	X[3]	X[3]	X[3]	X[3]	X[3]	X[3]	X[3]
X	X	10.3 Exhaust gas temperatur before turbocharger			X[3]							
X	X	10.4 Exhaust gas temperature after turbocharger	⊗[2]		X[3]	X[3]	X[3]	X[3]	X[3]	X[3]	X[3]	X[3]
		Separate indicators										
X	X	1. Service hour counter										

[1] Alternativ 144 x 144
[2] 288 x 144 not with DICARE ON-LINE
⊗ **Option**

[3] included in exhaust gas unit
[4] only if start is provided GL: always
( ) not available because of agreement with classification societies
[5] Remote indicators to be considered by shipyard. Optional delivery by Cat see respective column. Sensor for each remote indicator fitted on engine.
[6] Further indicators accord. to customer requirements on request.

21. Control and monitoring system

Remote indication interfacing

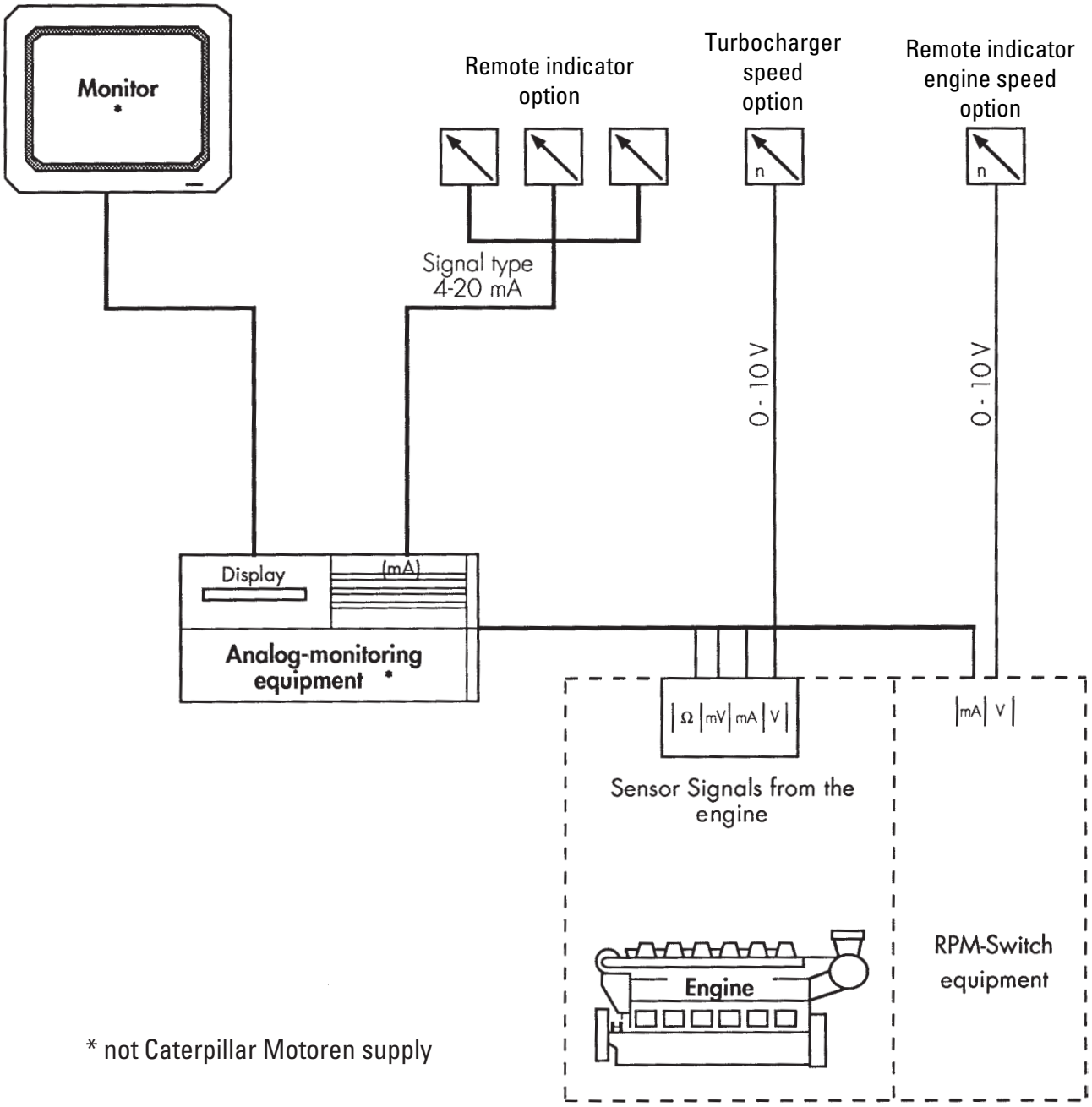

* not Caterpillar Motoren supply

21. Control and monitoring system

Protection system

Version = unattended engine room seagoing vessel

Operating voltage: 24 V DC
Type of protection: IP 55 for wall-mounting type housing
IP 20 for 19" subrack type

Protection against false polarity and transient protection provided.

Designed for: 4 starting interlock inputs
6 automatic stop inputs
6 automatic reduction inputs
4 manual stop inputs

The input and output devices are monitored for wire break.

Wall-mounting type

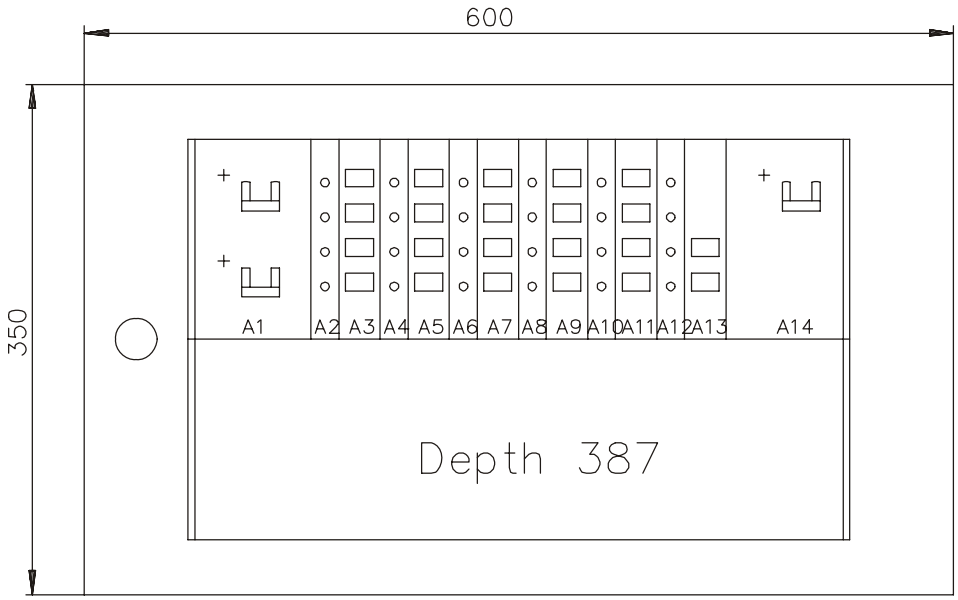

Subrack type

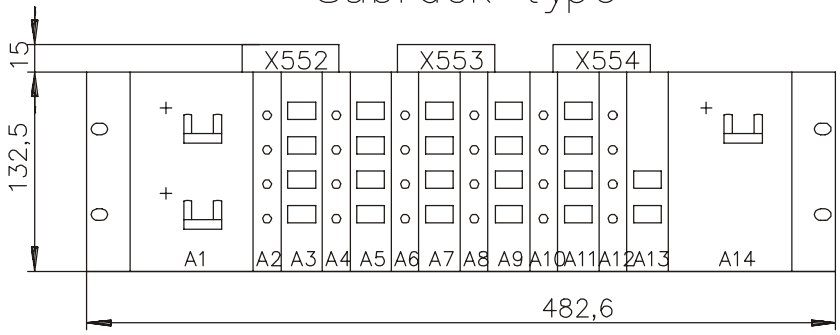

21. Control and monitoring system

Protection system

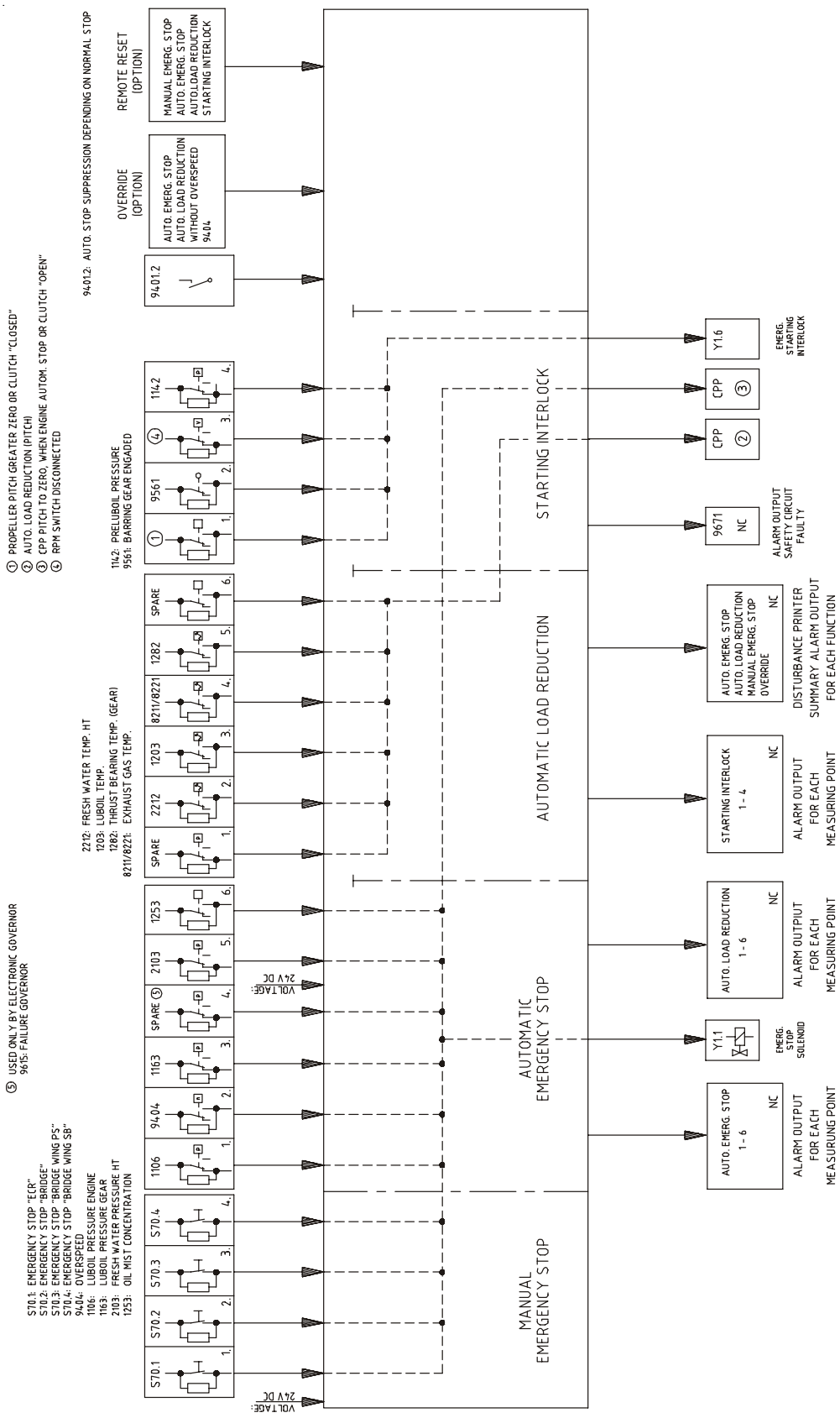

21. Control and monitoring system

Rpm switch system

Operating voltage: 24 V DC
Type of protection:
IP 55 for wall-mounting type housing
IP 20 for 19" subrack type

Designed for:
8 rpm switching points
Analogue outputs for speed:
2 x 0-10 V, 2 x 4-20 mA, 2 x frequency
Analogue outputs for fuel rack position:
0 - 10 V, 2 x 4-20 mA plus 2 binary outputs

Wall-mounting type

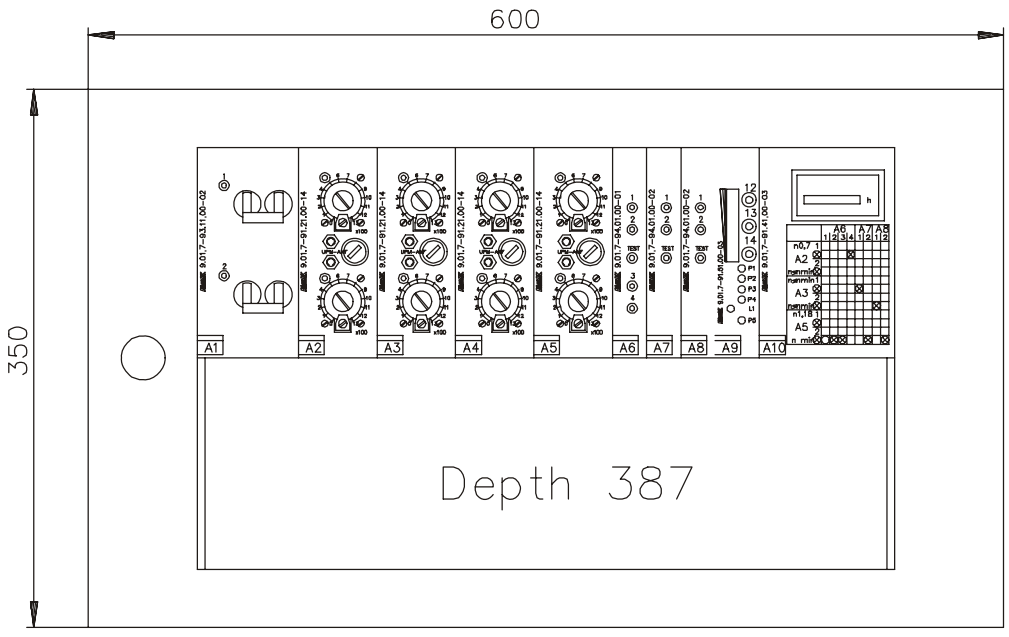

Subrack type

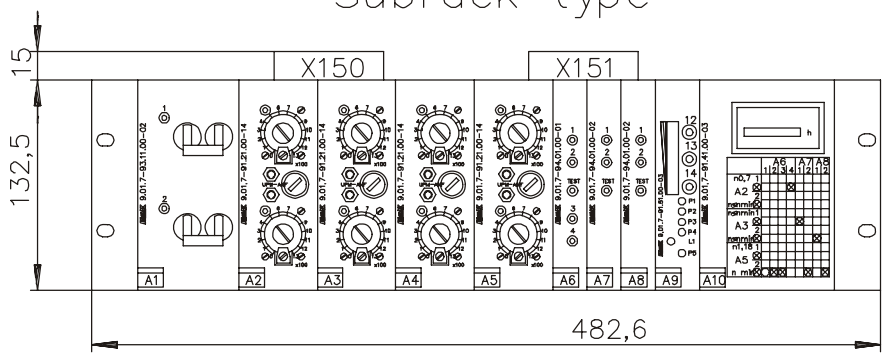

21. Control and monitoring system

Rpm switch system

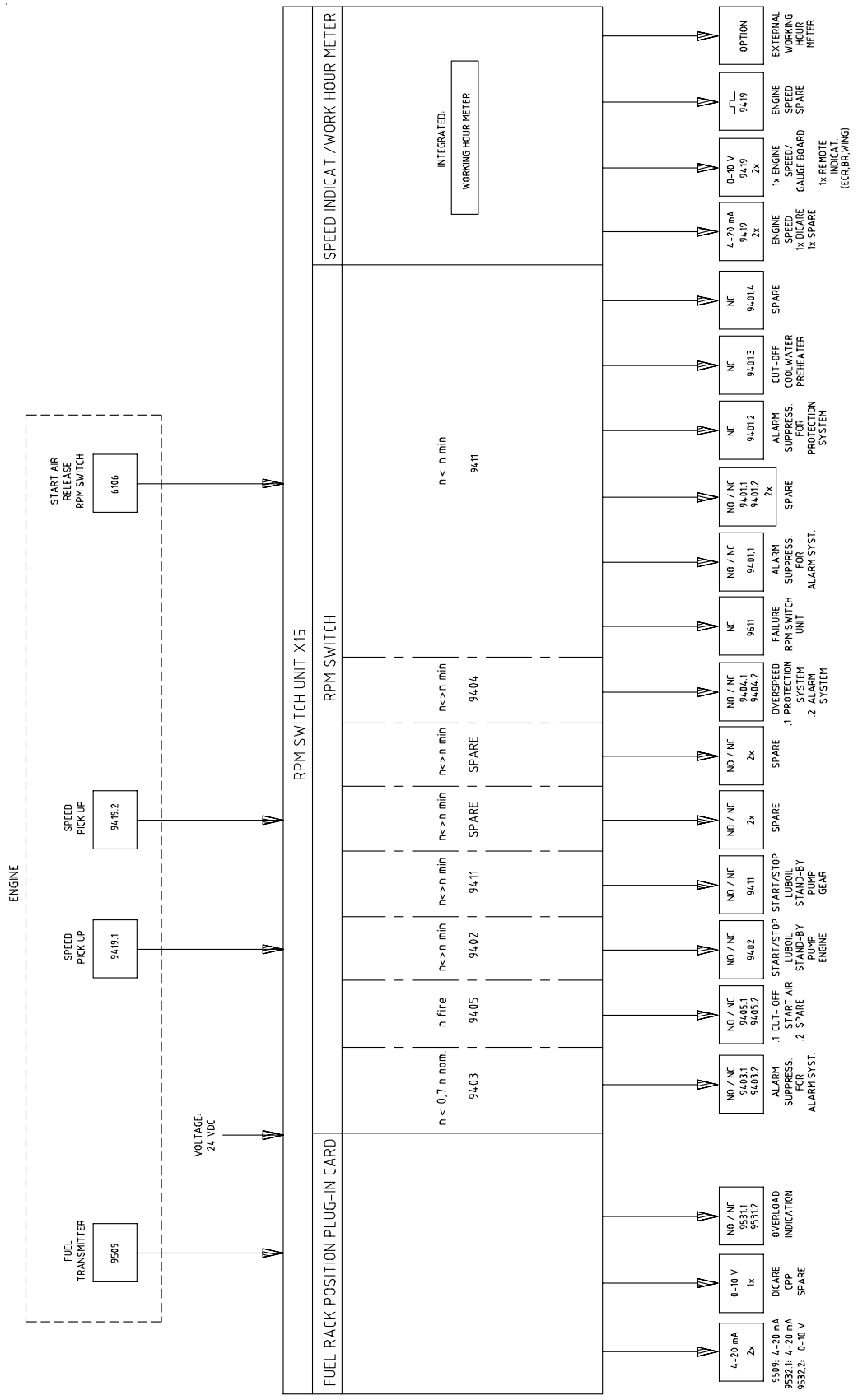

22. Diagnostic system DICARE

DICARE is an efficient expert system which collects permanently the actual operating data of the engine, scales them to ISO condition, compares them with the nominal values and evaluates all detected deviations from these nominal values. Out of this comparison a printable diagnosis results which ease condition based maintenance considerably.

The sensor equipment of the engine laid out for the "on-line operation" with analogue transmitters via a data converter feeds the PC with measured data on-line for evaluation and storing. Due to the automatically established history files trends can be made visible.

Benefits of DICARE:

- Early detection of wear.
- Optimum operating condition due to clearly laid out display of deviating engines parameters.
- Reduction of maintenance cost due to recognition of trends.
- Longer service life of components due to display of comparison of actual vs. desired values.
- Information about the engine condition by means of remote access possibilities.
- Allows personnel and material planning by early, condition-based recognition of contamination or wear.

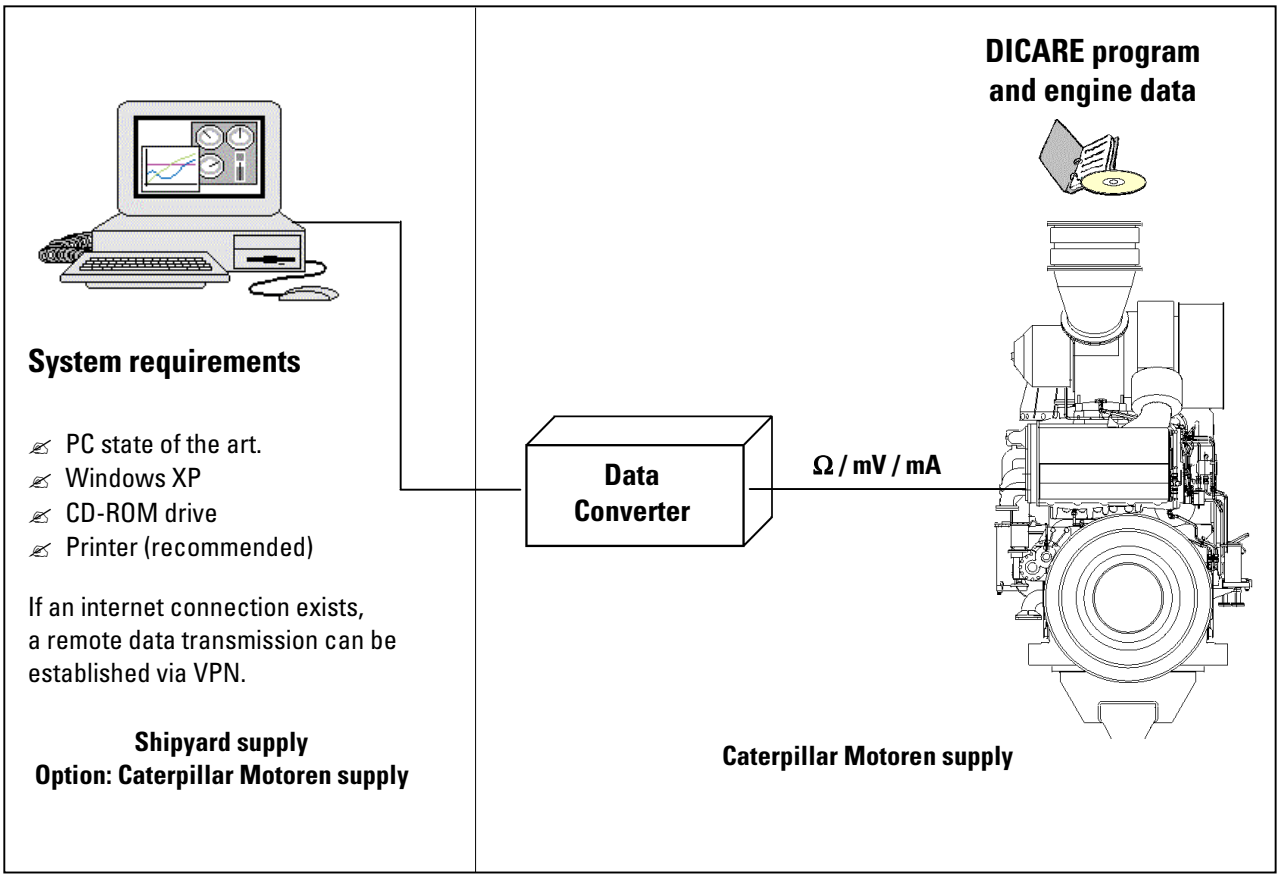

22. Diagnostic system DICARE

Transmitter for DICARE ON-LINE VM 32 C

Designation	Transmitter	Signal	Meas. point no. CM	Location
Fuel viscosity		4 - 20 mA	5253	L
Fuel temperature after viscomat	PT 100		5206	L
Fuel temperature at engine inlet	PT 100		5201	M
Injection pump rack position		4 - 20 mA	9509	DS
Lube oil pressure		4 - 20 mA	1105	M ◢
Lube oil temperature at engine inlet	PT 100		1202	M ◢
Freshwater pressure HT		4 - 20 mA	2102	M ◢
Freshwater temperature at engine inlet HT	PT 100		2201	M
Freshwater temperature at engine outlet HT	PT 100		2211	M ◢
Differential pressure charge air cooler		4 - 20 mA	7307	M
Intake air pressure		4 - 20 mA	6181	M
Intake air temperature before turbocharger	PT 100		7206	M
Charge air pressure after intercooler		4 - 20 mA	7109	M
Charge air temperature before intercooler	NiCrNi	mV	7309	M
Charge air temperature at engine inlet	PT 100		7201	M ◢
Exhaust gas temperature for each cylinder and after turbocharger	NiCrNi	mV	8211/8221	M ◢
Exhaust gas temperature before turbocharger	NiCrNi	mV	8231	M
Engine speed		4 - 20 mA	9419	DS
Turbocharger speed		4 - 20 mA	9429	M
Service hour counter (manual input)	Counter	binary	9409	DS

◢ = Transmitter from engine monitoring

Location
L = Separate
M = Engine
DS = RPM switch system

23. Diesel engine management system DIMOS

DIMOS is a computer aided maintenance and spare part management system for Caterpillar Motoren diesel engines. The DIMOS-system will include a data base which is filled with information derived from the operating instructions and the spares catalogue of your respective engine type. This system enables to administration and check the following four major subjects:

1. Maintenance
2. Material management
3. Statistics
4. Budget control.

These four major subjects are provided with many internal connections, so that no double inputs are required. All you need for running the DIMOS-system is commercial PC hardware.

The advantages are evident:

- Precise follow-up regarding the maintenance intervals as specified by Caterpillar Motoren. No scheduled date will be forgotten and no history file will be missed.
- Immediate access to maintenance and component information.
- Quick and simple modification of data is possible at any time.
- Extensive and permanently up-to-date decision documents for maintenance with precise updating of terms.
- A lot of paper work can be omitted, and this means a considerable saving of time.
- This can be taken from the DIMOS databank as well as from the CD-Rom and the standard documentation.

From various single information to an integrated system

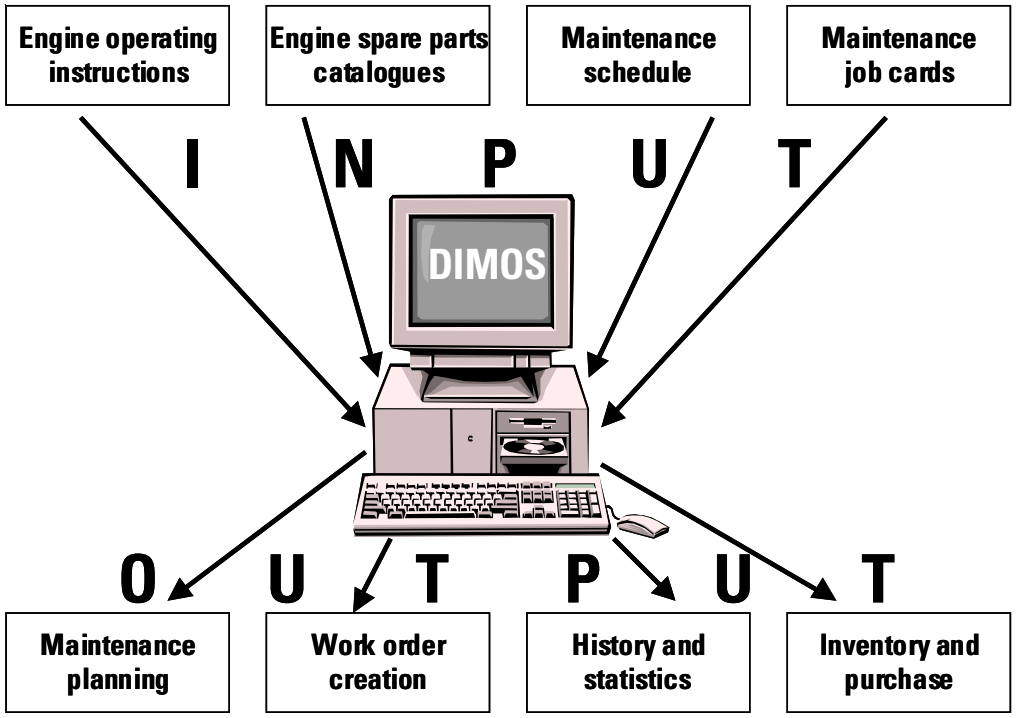

24. Standard acceptance test run

The acceptance test run is carried out on the testbed with customary equipment and auxiliaries using exclusively MDO and under the respective ambient conditions of the testbed. During this test run the fuel rack will be blocked at the contractual output value. In case of deviations from the contractual ambient conditions the fuel consumption will be converted to standard reference conditions.

The engine will be run at the following load stages acc. to the rules of the classification societies. After reaching steady state condition of pressures and temperatures these will be recorded and registered acc. to the form sheet of the acceptance test certificate:

Load [%]	Duration [min]
50	30
85	30
100	60
110	30

In addition to that the following functional tests will be carried out:

- governor test
- overspeed test
- emergency shut-down via minimum oil pressure
- start/stop via central engine control
- starting trials up to a minimum air pressure of 10 bar
- measurement of crank web deflection (cold/warm condition)

After the acceptance **main running gear, camshaft drive and timing gear train** will be inspected through the opened covers. Individual inspection of special engine components such as piston or bearings is not intended, because such inspections are carried out by the classification societies at intervals on series engines.

Engine movement due to vibration referred to the global vibration characteristics of the engine:

The basis for assessing vibration severity are the guidelines ISO 10816-6.

According to these guidline the MaK engine will be assigned to vibration severity grade 28, class 5. On the engine block the following values will not be exceeded:

Displacement	S_{eff}	< 0,448 mm	f > 2 Hz < 10 Hz
Vibration velocity	V_{eff}	< 28,2 mm/s	f > 10 Hz < 250 Hz
Vibration acceleration	a_{eff}	< 44,2 m/s^2	f > 250 Hz < 1000 Hz

25. Engine International Air Pollution Prevention Certificate

The MARPOL Diplomatic Conference has agreed about a limitation of NO_x emissions, referred to as Annex VI to Marpol 73/78.

When testing the engine for NO_x emissions, the reference fuel is Marine Diesel Oil (Distillate) and the test is performed according to ISO 8178 test cycles:

E2: Diesel electric propulsion, controllable pitch propeller				
Speed [%]	100	100	100	100
Power [%]	100	75	50	25
Weighting factor	0.2	0.5	0.15	0.15

Subsequently, the NO_x value has to be calculated using different weighting factors for different loads that have been corrected to ISO 8178 conditions.

An EIAPP (Engine International Air Pollution Prevention) certificate will be issued for each engine showing that the engine complies with the regulation. At the time of writing, only an interim certificate can be issued due to the regulation not yet in force.

According to the IMO regulations, a Technical File shall be made for each engine. This Technical File contains information about the components affecting NO_x emissions, and each critical component is marked with a special IMO number. Such critical components are injection nozzle, injection pump, camshaft, cylinder head, piston, connecting rod, charge air cooler and turbocharger. The allowable setting values and parameters for running the engine are also specified in the Technical File.

The marked components can later, on-board the ship, be easily identified by the surveyor and thus an IAPP (International Air Pollution Prevention) certificate for the ship can be issued on basis of the EIAPP and the on-board inspection.

26. Painting/Preservation

Inside preservation

N 576-3.3
Up to 1 year, engine protected from moisture.
- Main running gear and internal mechanics

Outside preservation

N 576-3.1 - Tectyl light
Europe
Storage in the open, protected from moisture, up to 1 year

Appearance of the engine:
- Castings with red oxide antirust paint
- Pipes and machined surfaces left as bare metal
- Attached components with colours of the makers

N 576-3.2 - Tectyl heavy-duty
Overseas
Storage in the open, protected from moisture, up to 1 year

Appearance of the engine:
- Castings with red oxide antirust paint
- Pipes and machined surfaces left as bare metal
- Attached components with colours of the makers

N 576-4.1 - Clear Varnish
Clear varnish painting is applicable within Europe for land transportation with protection from moisture. It is furthermore applicable for storage in a dry and tempered atmosphere.

Clear varnish painting is not permissible for:
- Sea transportation of engines
- Storage of engines in the open, even if they are covered with tarpaulin

VCI packaging as per N 576-5.2 is always required!
Durability and effectiveness are dependent on proper packing, transportation, and storage, i.e. the engine must be protected from moisture, the VCI foil must not be torn or destroyed.
Checks are to be carried out at regular intervals.
If the above requirements are not met, all warranty claims in connection with corrosion damages shall be excluded.

26. Painting/Preservation

Appearance of the engine:
- Castings with red oxide antirust paint
- Pipes and machined surfaces left as bare metal
- Attached components with colours of the makers
- Surfaces sealed with clear varnish
- Bare metal surfaces with light preservation

N 576-4.3 - Painting
- No VCI packaging:
  Short-term storage in the open, protected from moisture, max. 4 weeks
- With VCI packaging:
  Storage in the open, protected from moisture, up to 1 year

Appearance of the engine:
- Surfaces mostly painted with varnish
- Bare metal surfaces provided with light or heavy-duty preservation

N 576-5.2 - VCI packaging
Storage in the open, protected from moisture, up to 1 year.
Applies for engines with painting as per application groups N 576-4.1 to -4.4
Does not apply for engines with Tectyl outside preservation as per application groups N 576-3.1 and -3.2.

Description:
- Engine completely wrapped in VCI air cushion foil, with inserted VCI-impregnated flexible PU-foam mats.

N 576-5.2 Suppl. 1 - Information panel for VCI preservation and inspection
Applies for all engines with VCI packaging as per application group N 576-5.2

Description:
- This panel provides information on the kind of initial preservation and instructions for inspection.
- Arranged on the transport frame on each side so as to be easily visible.

N 576-6.1 - Corrosion Protection Period, Check, and Represervation
Applies to all engines with inside and outside storage

Description:
- Definitions of corrosion protection period, check, and represervation

27. Lifting of engines

For the purpose of transport the engine is equipped with a lifting device which shall remain the property of Caterpillar Motoren. It has to be returned in a useable condition free of charge.

max. distance when 2 cranes are being used

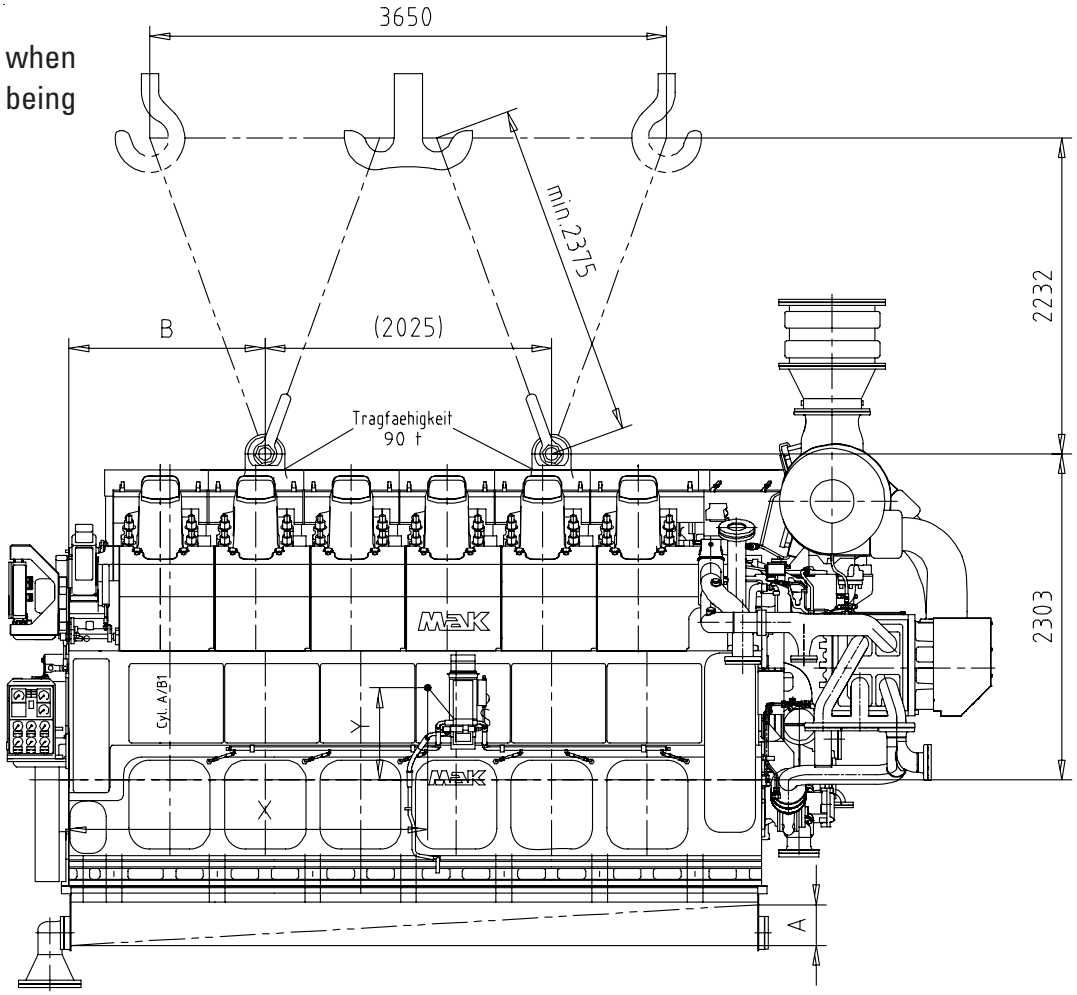

Attention!
If the engine is liftet an an oblique position the dimension "A" must not be exceeded.

Attention!
Device to be used for transport of engine types 12/16 M 32 C only. Max. lifting speed: 5 m/min.

Engine	Weight	Center of mass		Dimension	Dimension
	[t]	X [mm]	Y [mm]	A [mm]	B [mm]
12 M 32 C	64.4	2555	650	125	1384
16 M 32 C	81.6	3260	650	155	2059

28. Engine parts

Cylinder head, Weight 345 kg

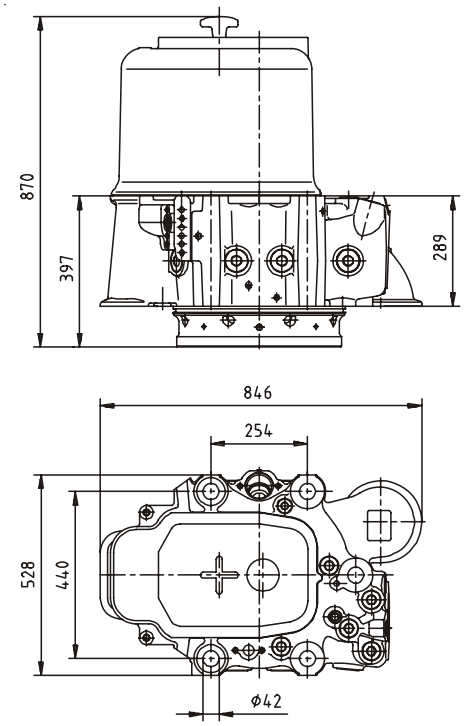

Cylinder liner, Weight 265 kg

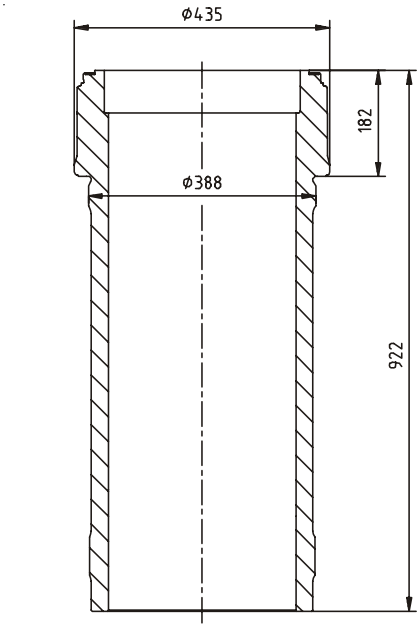

Connecting rod, Weight 241 kg

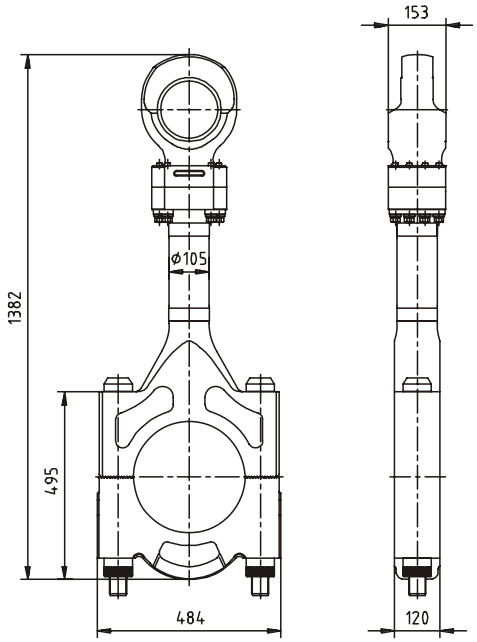

Piston, Weight 150 kg

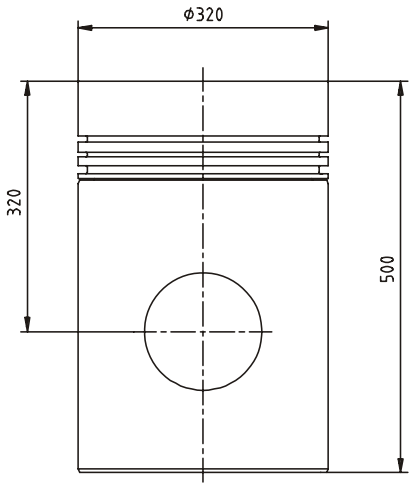

Contents

Caterpillar Marine Power Systems

Headquarters

Caterpillar Marine Power Systems
Neumühlen 9
22763 Hamburg/Germany

Phone: +49 40 2380-3000
Telefax: +49 40 2380-3535

Europe, Africa, Middle East

Caterpillar Marine Power Systems
Neumühlen 9
22763 Hamburg/Germany

Phone: +49 40 2380-3000
Telefax: +49 40 2380-3535

Americas

MaK Americas Inc.

3450 Executive Way
Miramar Park of Commerce
Miramar, FL. 33025/USA
Phone: +1 954 447 71 00
Telefax: +1 954 447 71 15

Asia Pacific

Caterpillar Marine Trading (Shanghai) Co., Ltd.
25/F, Caterpillar Marine Center
1319, Yan'an West Road
200050 Shanghai/P. R. China
Phone: +86 21 6226 2200
Telefax: +86 21 6226 4500

Caterpillar Marine Asia Pacific Pte Ltd
14 Tractor Road
Singapore 627973/
Singapore
Phone: +65 68287-600
Telefax: +65 68287-624

For more information please visit our website:
www.cat-marine.com or www.mak-global.com

Subject to change without notice.
Leaflet No. 240 · 02.08 · e · L+S · VM3

© 2007 Caterpillar All Rights Reserved. CAT, CATERPILLAR, their respective logos, „Caterpillar Yellow" and the POWER EDGE trade dress, as well as corporate identity used herein, are trademarks of Caterpillar and may not be used without permission

MaK

CATERPILLAR®